NATIONAL AERONAUTICS AND SPACE ADMINISTRATION

SPACE SHUTTLE MISSION STS-26

PRESS KIT
SEPTEMBER 1988

RETURN TO FLIGHT
TRACKING AND DATA RELAY SATELLITE (TDRS C)

STS-26 INSIGNIA

S87-39136 -- The predominant themes of the STS-26 insignia are: a new beginning (sunrise), a safe mission (stylized launch and plume), the building upon the traditional strengths of NASA (the red vector which symbolizes aeronautics on the original NASA insignia), and a remembrance of the crewmembers' seven colleagues who died aboard Challenger (the seven-starred Big Dipper). The insignia was designed by artist Stephen R. Hustvedt of Annapolis, Maryland.

The NASA insignia design for space shuttle flights is reserved for use by the astronauts and for other official use as the NASA Administrator may authorize. Public availability has been approved only in the form of illustrations by the various news media. When and if there is any change in this policy, which we do not anticipate, it will be publicly announced.

PHOTO CREDIT: NASA or National Aeronautics and Space Administration.

PUBLIC AFFAIRS CONTACTS

Sarah Keegan/Barbara Selby
Office of Space Flight
NASA Headquarters, Washington, DC
(Phone: 202/453-2352)

Geoffrey Vincent
Office of Space Operations
NASA Headquarters, Washington, DC
(Phone: 202/453-2754)

Lisa Malone
Kennedy Space Center, FL
(Phone: 407/867-2468)

Kyle Herring
Johnson Space Center, Houston, TX
(Phone: 703/483-5111)

Ed Medal
Marshall Space Flight Center, Huntsville, AL
(Phone: 205/544-0034)

Mack Herring
Stennis Space Center, Bay St. Louis, MS
(Phone: 601/688-3341)

Nancy Lovato
Ames-Dryden Flight Research Center, Edwards, CA
(Phone: 805/258-8381)

Jim Elliott
Goddard Space Flight Center, Greenbelt, MD
(Phone: 301/286-6256)

CONTENTS

GENERAL RELEASE 5
GENERAL INFORMATION 7
STS-26 QUICK LOOK 8
LAUNCH PREPARATIONS, COUNTDOWN AND LIFTOFF 9
MAJOR COUNTDOWN MILESTONES 12
SUMMARY OF MAJOR ACTIVITIES 13
STS-26 TRAJECTORY SEQUENCE OF EVENTS 14
SPACE SHUTTLE ABOARD MODES 15
LANDING AND POST-LANDING OPERATIONS 16
TRACKING AND DATA RELAY SATELLITE SYSTEM 17
INERTIAL UPPER STAGE 21
SECONDARY PAYLOADS 22
- Physical Vapor Transport of Organic Solids (PVTOS) 22
- Protein Crystal Growth Experiment (PCG) 24
- Infrared Communications Flight Experiment (IRCFE) 27
- Automated Directional Solidification Furnace (ADSF) 29
- Aggregation of Red Blood Cells (ARC) 31
- Isoelectric Focusing Experiment (IFE) 33
- Mesoscale Lightning Experiment (MLE) 35
- Phase Partitioning Experiment (PPE) 35
- Earth-Limb Radiance Experiment (ELRAD) 38
- Space Shuttle Student Involvement Program (SSIP) 39
- Semi-Permeable Membrane to Direct Crystal Growth 39
- Weightlessness Effects on Grain and Metal 39

OASIS INSTRUMENTATION 40
STS-26 PAYLOAD AND VEHICLE WEIGHTS 42
MAJOR ORBITER MODIFICATIONS 43
SOLID ROCKET MOTOR REDESIGN 44
SPACE SHUTTLE MAIN ENGINE IMPROVEMENTS 47
SPACEFLIGHT TRACKING AND DATA NETWORK 48
NASA-CONTROLLED TRACKING STATIONS 49
HUNTSVILLE OPERATIONS SUPPORT CENTER 50
STS-26 MENU 51
CREW BIOGRAPHIES 57
SPACE SHUTTLE PROGRAM MANAGEMENT 60
ACRONYMS AND ABBREVIATIONS 62

RELEASE: 88-121 **September, 1988**

STS-26 -- THE RETURN TO FLIGHT

The Space Shuttle will return to flight when the orbiter Discovery is launched on its seventh flight now scheduled for no earlier than late September, 1988.

STS-26 will have as its primary payload the Tracking and Data Relay Satellite (TDRS-C) that will complete the constellation needed to communicate with spacecraft in low-Earth orbit. TDRS-B was lost in the 51-L Challenger accident. A third TDRS will be launched on a later Shuttle mission to replace the first TDRS, which then will be used as an on-orbit spare in the event that one of the two operational satellites fails.

Commander of the five-man crew is Frederick H. (Rick) Hauck, captain, USN, a veteran of two Shuttle missions -- 51-A and STS-7. Pilot for the mission is Richard O. (Dick) Covey, a colonel in the USAF and veteran of the 51-I Shuttle mission.

Three mission specialists are assigned to the crew: John M. (Mike) Lounge, David C. Hilmers, lt. colonel, USMC, and George D. (Pinky) Nelson. STS-26 will be the second flight for Lounge and Hilmers who previously flew on missions 51-I and 51-J, respectively. Nelson has flown two previous Shuttle missions -- 41-C and 61-C.

Discovery is scheduled to be launched from the Kennedy Space Center, Fla., Launch Pad 39-B, into a 160-nautical-mile, 28.5 degree orbit. Liftoff is planned for (TBD) a.m. EDT. Nominal mission duration is 4 days and 1 hour, with landing at Edwards Air Force Base, Calif., on Sept. (TBD), 1988, at (TBD) a.m. EDT.

TDRS-C will be deployed 6 hours, 13 minutes into the mission on flight day one. There are two additional deploy times available on that day and one the following day. The 5,000-pound satellite will join the first TDRS, deployed on STS-6 in April 1983, to provide communications and data links between Earth and the Shuttle, as well as other spacecraft.

TDRS-A is now in geosynchronous orbit (22,300 mi.) over the Atlantic Ocean east of Brazil (41 degrees west longitude). Following deployment from Discovery, TDRS-C will undergo testing and will be moved to its operational position over the Pacific Ocean south of Hawaii (171 degrees W. longitude).

An Air Force-developed inertial upper stage (IUS) will boost the TDRS to geosynchronous orbit. The IUS is mated to the TDRS-C and the combination spacecraft and upper stage will be spring ejected from the orbiter payload bay.

Following deployment, Discovery will maneuver to a position 36 nautical mi. behind and 16 nautical mi. above the TDRS-C/IUS before the two-stage motor ignites about 60 minutes after deployment. The three-axis, stabilized upper stage will maneuver the TDRS to the desired attitude. TDRS then will be configured for operation by the White Sands Ground Terminal, N.M.

CONTEL, Atlanta, Ga., owns and operates the TDRS system for NASA. TRW's Defense and Space Systems Group, Redondo Beach, CA, built the satellites.

The Orbiter Experiments Program Autonomous Supporting Instrumentation System (OASIS) will be flown on STS-26 to record environmental data in the orbiter payload bay during STS flight phases. OASIS will measure TDRS vibration, strain, acoustics and temperature during orbiter ascent, using transducers affixed directly to the payload.

OASIS flight hardware consists of signal conditioning, multiplexing and recording equipment mounted on a Shuttle adaptive payload carrier behind the TDRS. Command and status interface is achieved through the standard mixed cargo harness and the general purpose computers.

In addition to TDRS-C and OASIS, Discovery will carry 11 secondary payloads, including two student experiments, involving microgravity research, materials processing and electrical storm studies.

After landing at Edwards, Discovery will be towed to the NASA Ames-Dryden Flight Research Facility, hoisted atop the Shuttle Carrier Aircraft and ferried back to the Kennedy Space Center to begin processing for its next flight.

(END OF GENERAL RELEASE; BACKGROUND INFORMATION FOLLOWS.)

GENERAL INFORMATION

NASA Select Television Transmission

The schedule for television transmissions from the orbiter and for the change-of-shift briefings from Johnson Space Center, Houston, will be available during the mission at Kennedy Space Center, Fla.; Marshall Space Flight Center, Huntsville, AL; Johnson Space Center; and NASA Headquarters, Washington, DC
The television schedule will be updated daily to reflect changes dictated by mission operations. NASA Select television is available on RCA Satcom F-2R, Transponder 13, located at 72 degrees west longitude.

Special Note to Broadcasters

Beginning in September and continuing throughout the mission, approximately 7 minutes of audio interview material with the crew of STS-26 will be available to broadcasters by calling 202/269-6572.

Status Reports

Status reports on countdown and mission progress, on-orbit activities and landing operations will be produced by the appropriate NASA news center.

Briefings

An STS-26 mission press briefing schedule will be issued prior to launch. During the mission, flight control personnel will be on 8-hour shifts. Change-of-shift briefings by the off-going flight director will occur at approximately 8-hour intervals.

STS-26 -- QUICK LOOK

Crew:	Frederick H. (Rick) Hauck, commander Richard O. Covey, pilot John M. (Mike) Lounge, mission specialist (MS-1) David C. Hilmers, mission specialist (MS-2) George D. (Pinky) Nelson, mission specialist (MS-3)
Orbiter:	Discovery (OV-103)
Launch Site:	Pad 39-B, Kennedy Space Center, FL
Launch Date:	Late September, 1988
Launch Time:	(TBD) a.m. EDT
Launch Window:	3 hours
Orbital Inclination:	28.45 degrees
Altitude:	160 nautical miles
Mission Duration:	4 days, 1 hour
Landing Date/Time:	Sept. (TBD), 1988, (TBD) a.m. EDT
Primary Landing Site:	Edwards AFB, CA
Weather Alternate:	White Sands Space Harbor, NM
Trans-Atlantic Abort:	Ben Guerir, Morocco
Abort-Once-Around:	Edwards AFB, CA
Primary Payload:	Tracking and Data Relay Satellite (TDRS-C)
Secondary Payloads:	Automatic Directional Solidification Furnace (ADSF) Physical Vapor Transport of Organic Solids (PVTOS) Infrared Communications Flight Experiment (IRCFE) Protein Crystal Growth Experiment (PCG) Isoelectric Focusing Experiment (IEF) Phase Partitioning Experiment (PPE) Aggregation of Red Blood Cells (ARC) Mesoscale Lightning Experiment (MLE) Earth-Limb Radiance Experiment (ELRAD) 2 Shuttle Student Involvement Program (SSIP) Experiments

STS-26 MISSION OBJECTIVES

The primary objective of STS-26 is to deliver NASA's second Tracking and Data Relay Satellite to orbit. The TDRS-C deployment will occur 6 hours, 6 minutes into the flight on Orbit 5. Day 2 is reserved for backup deployment opportunities. Experiments will be activated and performed throughout the flight.

LAUNCH PREPARATIONS, COUNTDOWN AND LIFTOFF

Discovery was selected as the Space Shuttle for the STS-26 mission in 1986. At the time of the 51-L accident, Discovery was in temporary storage in the KSC Vehicle Assembly Building (VAB) awaiting transfer to the Orbiter Processing Facility (OPF) for preparation for the first Shuttle flight from Vandenberg Air Force Base, CA, scheduled for later that year. Discovery last flew in August 1985 on Shuttle mission 51-I, the orbiter's sixth flight since it joined the fleet in November 1983.

In January 1986, the Shuttle Atlantis was in the OPF, prepared for the Galileo mission and ready to be mated to the boosters and tank in the VAB. The orbiter Columbia had just completed the 61-C mission a few weeks prior to the accident and was also in the OPF undergoing post-flight deconfiguration.

Various Shuttle manifest options were being considered, and it was determined that Atlantis would be rolled out to Launch Pad 39-B for fit checks of new weather protection modifications and for an emergency egress exercise and a countdown demonstration test. During that year it also was decided that Columbia would be flown to Vandenberg for fit checks. Discovery was then selected for the STS-26 mission.

Discovery was moved from the VAB High Bay 2, where it was in temporary storage, into the OPF the last week of June 1986. Power up modifications were active on the orbiter's systems until mid-September 1986 when Discovery was transferred to the VAB while facility modifications were performed in Bay 1 of the OPF.

Discovery was moved back into the OPF bay 1 on Oct. 30, 1987, a milestone that initiated an extensive modification and processing flow to ready the vehicle for flight. The hiatus in launching offered an opportunity to "tune-up" and fully check out all of the orbiter's systems and treat the orbiter as if it was a new vehicle. Most of the orbiter's major systems and components were removed and sent to the respective vendors for modifications or to be rebuilt.

After an extensive powered-down period of 6 months, which began in February 1987, Discovery's systems were awakened when power surged through its electrical systems on Aug. 3, 1987.

Discovery remained in the OPF while workers implemented over 200 modifications and outfitted the payload bay for the Tracking and Data Relay Satellite.

Flight processing began in mid-September during which the major components of the vehicle were reinstalled and checked out, including the main engines, the right and left hand orbital maneuvering system pods and the forward reaction control system.

In January 1988, Discovery's three main engines arrived at KSC and were installed. Engine 2019 arrived Jan. 6, 1988, and was installed in the number one position Jan. 10. Engine 2022 arrived Jan. 15 and was installed in the number 2 position Jan. 24. Engine 2028 arrived Jan. 21 and was installed in the number 3 position also on Jan. 24.

The redesigned solid rocket motor segments began arriving at KSC March 1, and the first segment, the left aft booster, was stacked on Mobile Launcher 2 in VAB High Bay 3 on March 29. Technicians started with the left aft booster and continued stacking the four left hand segments before beginning the right hand segments on May 5. The forward assemblies/nose cones were attached May 27 and 28. The SRB field joints were closed out prior to mating the external tank to the boosters on June 10. An interface test between the boosters and tank was conducted a few days later to verify the connections.

The OASIS payload was installed in Discovery's payload bay on April 19.

The TDRS arrived at the Vertical Processing Facility on May 16, and its Inertial Upper Stage (IUS) arrived May 24. The TDRS/IUS mechanical mating was accomplished on May 31.

Discovery was moved from the OPF to the VAB June 21, where it was mated to the external tank and solid rocket boosters. A Shuttle Interface Test was conducted shortly after the mate to check out the mechanical and electrical connections between the various elements of the Shuttle vehicle and the function of the onboard flight systems.

The assembled Space Shuttle vehicle aboard its mobile launcher platform was rolled out of the VAB on July 4, 4.2 miles to Launch Pad 39-B for a few major tests and final launch preparations.

A few days after Discovery's orbital maneuvering system pods were loaded with hypergolic propellants, a tiny leak was detected in the left pod (June 14). Through the use of a small, snake-like, fiber optics television camera, called a Cobra boroscope, workers pinpointed the leak to a dynatube fitting in the vent line for the reaction control system nitrogen tetroxide storage tank, located in the top of the OMS pod.

The tiny leak was stabilized and controlled by "pulse-purging" the tank with helium - an inert gas. Pulse-purge is an automatic method of maintaining a certain amount of helium in the tank. In addition, console operators in the Launch Control Center firing room monitored the tank for any change that may have required immediate attention. It was determined that the leak would not affect the scheduled Wet Countdown Demonstration Test (WCDDT) and the Flight Readiness Firing (FRF) and repair was delayed until after these important tests.

The WCDDT, in which the external tank was loaded with liquid oxygen and liquid hydrogen, was conducted August 1. A few problems with ground support equipment resulted in unplanned holds during the course of the countdown.

A leak in the hydrogen umbilical connection at the Shuttle tail service mast developed while liquid hydrogen was being loaded into the external tank. Engineers traced the leak to a pressure monitoring connector. During the WCDDT, the leak developed again. The test was completed with the liquid hydrogen tank partially full and the special tanking tests were deleted. Seals in the 8-inch fill line in the tail service mast were replaced and leak checked prior to the FRF.

In addition, the loading pumps in the liquid oxygen storage farm were not functioning properly. The pumps and their associated motors were repaired.

After an aborted first attempt, the 22-second flight readiness firing of Discovery's main engines was conducted August 10. The first FRF attempt was halted inside the T-10 second mark due to a sluggish fuel bleed valve on the number 2 main engine. This valve was replaced prior to the FRF. This firing verified that the entire Shuttle system - including launch equipment, flight hardware and the launch team - were ready for flight. With over 700 pieces of instrumentation installed on the vehicle elements and launch pad, the test provided engineers with valuable data, including characteristics of the redesigned solid rocket boosters.

After the test, a team of Rockwell technicians began repairs to the OMS pod leak. Four holes were cut into two bulkheads with an air powered router on Aug. 17. A metal "clamshell" device was bolted around the leaking dynatube fitting. The clamshell was filled with Furmanite - a dark thick material which consists of graphite, silicon and heavy grease and glass fiber. After an initial leak check was successfully performed, covers were bolted over the holes August 19, and the tank was pressurized to monitor any decay. No leakage or decay in pressure was noted and the fix was deemed a success.

TDRS-C and its IUS upper stage were transferred from the VPF to Launch Pad 39-B on August 15. The payload was installed into Discovery's payload bay August 29.

A Countdown Demonstration Test, a dress rehearsal for the STS-26 flight crew and KSC launch team, is designed as a practice countdown for the launch. At press time, it was planned for September 8.

Launch preparations scheduled the last two weeks prior to launch countdown include final vehicle ordnance activities, such as power-on stray-voltage checks and resistance checks of firing circuits; loading the fuel cell

storage tanks; pressurizing the hypergolic propellant tanks aboard the vehicle; final payload closeouts; and a final functional check of the range safety and SRB ignition, safe and arm devices.

The launch countdown is scheduled to pick up at the T-minus-43 hour mark, leading up to the first Shuttle liftoff since January 28, 1986. The STS-26 launch will be conducted by a joint NASA/industry team from Firing Room 1 in the Launch Control Center.

MAJOR COUNTDOWN MILESTONES

T-43 Hours	Power up the Space Shuttle
T-34 Hours	Begin orbiter and ground support equipment closeouts for launch
T-30 Hours	Activate Discovery's navigation aids
T-25 Hours	Load the power reactant storage and distribution system with liquid oxygen
T-22 Hours	Load liquid hydrogen into the power reactant storage and distribution system
T-20 Hours	Activate and warm up the three inertial measurement units (IMU)
T-19 Hours	Perform interface check between Houston-Mission Control and the Merritt Island Launch Area (MILA) tracking station
T-13 Hours	Perform pre-ingress switch list in the flight and middecks
T-11 Hours	Start 8 hour, 40 minute built-in hold (This time could be adjusted based on day of launch)
T-11 Hours (counting)	Retract Rotating Service Structure away from vehicle to launch position
T-9 Hours	Activate orbiter's fuel cells
T-8 Hours	Configure Mission Control communications for launch; clear blast danger area
T-7 Hours	Perform Eastern Test Range open loop command test
T-6 Hours	Start external tank chilldown and propellant loading
T-5 Hours	Start IMU pre-flight calibration
T-4 Hours	Perform MILA antenna alignment
T-3 Hours	Begin 2-hour built-in hold; external tank loading complete; ice team goes to pad for inspections; wake flight crew (launch minus 4 hours, 20 minutes)
T-3 Hours (counting)	Weather briefing; closeout crew has "go" to proceed to the White Room to begin preparing Discovery's cockpit for the flight crew's entry
T-2 Hours, 30 Min	Flight crew departs O&C Building for Launch Pad 39-B (launch minus 2 hours, 50 minutes)
T-2 Hours	Crew enters orbiter vehicle (launch minus 2 hours, 20 minutes)
T-61 Min	Start pre-flight alignment of IMUs
T-20 Min	Begin 10-minute, built-in hold
T-20 Min (counting)	Configure orbiter computers for launch
T-9 Min	Begin 10-minute, built-in hold; perform status check and receive launch director "go"
T-9 Min (counting)	Start ground launch sequencer
T-7 Min, 30 Sec	Retract orbiter access arm
T-5 Min	Pilot starts auxiliary power units; arm range safety, SRB ignition systems
T-3 Min, 30 Sec	Orbiter goes on internal power
T-2 Min, 55 Sec	Pressurize liquid oxygen tank for flight and retract gaseous oxygen vent hood
T-1 Min, 57 Sec	Pressurize liquid hydrogen tank
T-31 Sec	"Go" from ground computer for orbiter computers to start the automatic launch sequence
T-6.6 Sec	"Go" for main engine start
T-3 Sec	Main engines at 90 percent thrust
T-0	SRB ignition, holddown post release and liftoff
T+7 Sec	Shuttle clears launch tower and control switches to Johnson Space Center

SUMMARY OF MAJOR ACTIVITIES

Flight Day 1
Ascent
Post-insertion checkout
TDRS-C/IUS deploy
ADSF, PCG, PVTOS, ARC activation

Flight Day 2
Backup TDRS-C/IUS deploy opportunity
PPE

Flight Day 3
ELRAD
SSIP
Deorbit prep rehearsal

Flight Day 4
PPE
Flight control systems checkout
Cabin stowage
Landing preparations

Flight Day 5
Deorbit preparations
Deorbit burn
Landing at EAFB

STS-26 TRAJECTORY SEQUENCE OF EVENTS

Event	MET (d/h:m:s)	Inertial Velocity (fps)
Launch	00/00:00:00	
Begin roll maneuver	00/00:00:07	1,346
End roll maneuver	00/00:00:14	1,418
Begin SSME throttle down to 65%	00/00:00:27	1,728
Begin SSME throttle up to 104%	00/00:00:59	2,404
Maximum dynamic pressure (Max Q)	00/00:01:04	2.551
SRB staging	00/00:02:04	5,326
Negative return	00/00:04:04	8,275
Main engine cutoff (MECO)*	00/00:08:31	25,783
Zero thrust	00/00:08:38	25,871
OMS-2 burn**	00/00:39:55	
TDRS/IUS deploy	00/06:13:00	
Deorbit burn	03/23:56:00	
Landing	04/00:56:00	

* Apogee, perigee at MECO: 156 x 35 nautical miles
** Direct insertion ascent: no OMS-1 required
Apogee, perigee post-OMS-2: 161 x 160 nm

SPACE SHUTTLE ABORT MODES

Space Shuttle launch abort philosophy aims toward safe and intact recovery of the flight crew, orbiter and its payload. Abort modes include:

- Abort-to-Orbit (ATO) -- Partial loss of main engine thrust late enough to permit reaching a minimal 105-nautical-mile orbit with orbital maneuvering system engines.

- Abort-Once-Around (AOA) -- Earlier main engine shutdown with the capability to allow one orbit around before landing at Edwards Air Force Base, Calif.; White Sands Space Harbor, N.M.; or the Shuttle Landing Facility at Kennedy Space Center, FL

- Trans-Atlantic Abort Landing (TAL) -- Loss of two main engines midway through powered flight would force a landing at Ben Guerir, Morocco; Moron, Spain; or Banjul, The Gambia.

- Return to Launch Site (RTLS) -- Early shutdown of one or more engines and without enough energy to reach Ben Guerir, would result in a pitch around and thrust back towards KSC until within gliding distance of the KSC Shuttle Landing Facility.

STS-26 contingency landing sites are Edwards AFB, White Sands Space Harbor, Kennedy Space Center, Ben Guerir, Moron and Banjul.

LANDING AND POST-LANDING OPERATIONS

Kennedy Space Center is responsible for ground operations of the orbiter once it has rolled to a stop on the runway at Edwards Air Force Base. Those operations include preparing the Shuttle for the return trip to Kennedy.

After landing, the flight crew aboard Discovery begins "safing" vehicle systems. Immediately after wheel stop, specially garbed technicians will determine that any residual hazardous vapors around the orbiter are below significant levels, before proceeding to other safing operations.

Once the initial safety assessment is made, access vehicles are positioned around the rear of the orbiter so that lines from the ground purge and cooling vehicles can be connected to the umbilical panels on the aft end of Discovery.

Freon line connections are completed and coolant begins circulating through the umbilicals to aid in heat rejection and protect the orbiter's electronic equipment. Other lines provide cooled, humidified air to the payload bay and other cavities to remove any residual fumes and provide a safe environment inside Discovery.

A mobile white room is moved around the crew hatch once it is verified that there are no concentrations of toxic gases around the forward part of the vehicle. The crew is expected to leave Discovery about 30 to 40 minutes after landing. As the crew exits, technicians enter the orbiter to complete the vehicle safing activity.

A tow tractor will be connected to Discovery to pull it off the runway at Edwards and position it inside the Mate/Demate Device (MDD) at the nearby Dryden Flight Research Facility. After the Shuttle has been jacked and leveled, residual fuel cell cryogenics are drained and unused pyrotechnic devices are disconnected prior to returning the orbiter to Kennedy.

The aerodynamic tail cone is installed over the three main engines, and the orbiter is bolted on top of the 747 Shuttle Carrier Aircraft for the ferry flight back to Florida. The 747 is scheduled to leave California about 6 days after landing. An overnight stop is scheduled for refueling and the ferry flight continues the next day.

Once back at Kennedy, Discovery will be pulled inside the hangar-like facility for post-flight inspections and in-flight anomaly trouble shooting. These operations are conducted in parallel with the start of routine systems reverification to prepare Discovery for its next mission.

TRACKING AND DATA RELAY SATELLITE SYSTEM

The Tracking and Data Relay Satellite (TDRS-C) is the third TDRS advanced communications spacecraft to be launched aboard the Space Shuttle. TDRS-1 was launched during Challenger's maiden flight in April 1983. The second, TDRS-B, was lost during the Challenger accident of January 1986.

TDRS-1 is now in geosynchronous orbit over the Atlantic Ocean just east of Brazil (41 degrees west longitude). It initially failed to reach its desired orbit, following successful Shuttle deployment, because of booster rocket failure. A NASA-industry team conducted a series of delicate spacecraft maneuvers over a 2-month period to place TDRS-1 into the desired 22,300 mile altitude.

Following arrival at geosynchronous altitude, TDRS-C (TDRS-3 in orbit) will undergo a series of tests prior to being moved to its operational geosynchronous position over the Pacific Ocean south of Hawaii (171 degrees W. longitude).

TDRS-3 and its identical sister satellite will support up to 23 user spacecraft simultaneously, providing two basic types of service -- a multiple access service which can simultaneously relay data from as many as 19 low-data-rate user spacecraft, and a single access service which will provide two high-data-rate communication relays from each satellite.

TDRS-3 will be deployed from the orbiter approximately 6 hours after launch. Transfer to geosynchronous orbit will be provided by the solid propellant Boeing/U.S. Air Force Inertial Upper Stage (IUS). Separation from the IUS occurs approximately 13 hours after launch.

The next TDRS spacecraft, currently targeted for launch in January 1989, will replace the partially-degraded TDRS-1 over the Atlantic. TDRS-1 will be moved to a location between the two operational TDRS spacecraft and serve as an on-orbit spare.

The concept of using advanced communications satellites was developed following studies in the early 1970s which showed that a system of communication satellites operated, from a single ground terminal, could support Space Shuttle and other low Earth-orbit space missions more effectively than a worldwide network of ground stations.

NASA's Space Tracking and Data Network ground stations will be significantly reduced in number. Three of the network's present ground stations -- Madrid, Spain; Canberra, Australia; and Goldstone, Calif. -- already have been transferred to the Deep Space Network managed by NASA's Jet Propulsion Laboratory in Pasadena, CA.

The remaining ground stations, except those necessary for launch operations, will be closed or transferred to other agencies after the successful launch and checkout of the next two TDRS satellites.

The ground station network, managed by the Goddard Space Flight Center, Greenbelt, Md., provides communications support for only a small fraction (typically 15-20 percent) of a space craft's orbital period. The TDRSS network, when established, will provide coverage for almost the entire orbital period of user spacecraft (about 85 percent).

A TDRSS ground terminal has been built at White Sands, NM, a location that provides a clear view to the TDRSS satellites and weather conditions generally good for communications.

The NASA ground terminal at White Sands provides the inter face between the TDRSS and its network elements, which have their primary tracking and communication facilities at Goddard. Also located at Goddard is the Network Control Center, which provides system scheduling and is the focal point for NASA communications with the TDRSS satellites and network elements.

The TDRSS satellites are the largest, privately-owned telecommunications spacecraft ever built, each weighing about 5,000 lbs. Each satellite spans more than 57 ft., measured across its solar panels. The single-access antennas, fabricated of molybdenum and plated with 14K gold, each measure 16 ft. in diameter and, when deployed, span more than 42 ft. from tip to tip.

The satellite consists of two modules. The equipment module houses the subsystems that operate the satellite. The telecommunications payload module has electronic equipment for linking the user spacecraft with the ground terminal. The TDRS has 7 antennas and is the first designed to handle communications through S, Ku and C frequency bands.

Under contract, NASA has leased the TDRSS service from CONTEL, Atlanta, Ga., the owner, operator and prime contractor for the system.

TRW Space and Technology Group, Redondo Beach, CA, and the Harris Government Communications System Division, Melbourne, FL, are the two primary subcontractors to CONTEL for spacecraft and ground terminal equipment, respectively. TRW also provided the software for the ground segment operation and integration and testing for the ground terminal and the TDRSS, as well as the systems engineering.

Primary users of the TDRSS satellite have been the Space Shuttle, Landsat Earth resources satellites, the Solar Mesosphere Explorer, the Earth Radiation Budget Satellite, the Solar Maximum Mission satellite and Spacelab.

Future users include the Hubble Space Telescope, scheduled for launch in mid-1989, the Gamma Ray Observatory and the Upper Atmosphere Research Satellite.

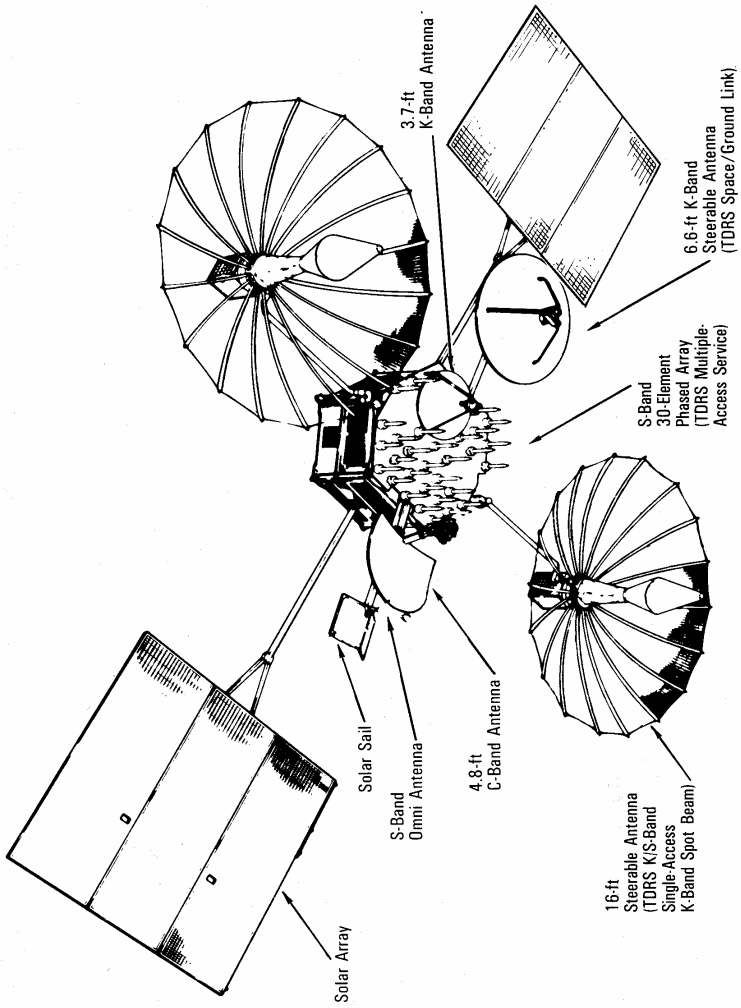

Tracking and Data Relay Satellite

TRACKING AND DATA RELAY SATELLITE SYSTEM (TDRSS)

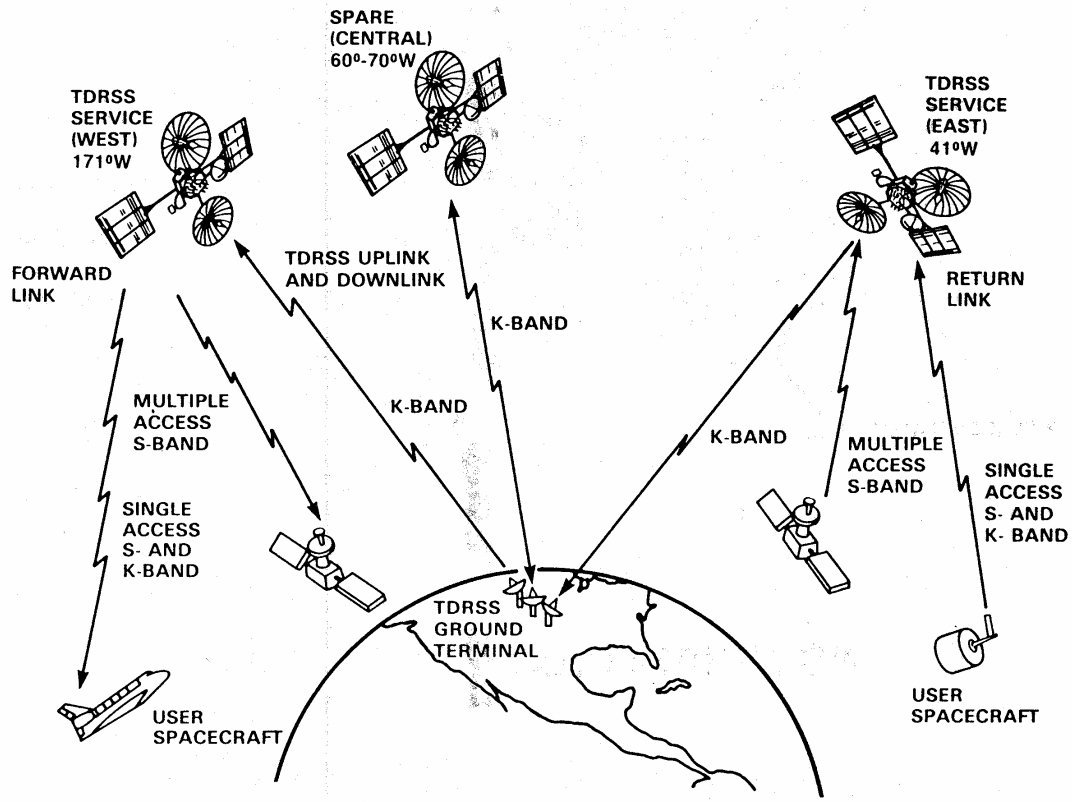

INERTIAL UPPER STAGE

The Inertial Upper Stage (IUS) will be used to place NASA's Tracking and Data Relay Satellite (TDRS-C) into geosynchronous orbit during the STS-26 Space Shuttle mission.

The STS-26 crew will deploy the combined IUS/TDRS-C payload approximately 6 hours, 13 minutes after liftoff, at a low-Earth orbit of 160 nautical miles. Upper stage airborne support equipment, located in the orbiter payload bay, positions the combined IUS/TDRS-C into its proper deployment attitude -- an angle of 58 degrees -- and ejects it into low-Earth orbit. Deployment from the orbiter will be by a spring-ejection system.

Following the deployment, the orbiter will move away from the IUS/TDRS-C to a safe distance. The IUS first stage will fire about 1 hour after deployment.

After the first stage burn of 145 seconds, the solid fuel motor will shut down. After coasting for about 5 hours, 15 minutes, the first stage will separate and the second stage motor will ignite at 12 hours, 29 minutes after launch to place the spacecraft in its desired orbit. Following a 103-second burn, the second stage will shut down as the IUS/TDRS-C reaches the predetermined, geosynchronous orbit position.

Thirteen hours, 7 minutes after liftoff, the second stage will separate from TDRS-C and perform an anti-collision maneuver with its onboard reaction control system.

After the IUS reaches a safe distance from TDRS-C, the second stage will relay performance data to a NASA tracking station and then shut itself down 13 hours, 17 minutes after launch.

The IUS has a number of features which distinguish it from previous upper stages. It has the first completely redundant avionics system developed for an unmanned space vehicle. It can correct in-flight features within milliseconds.

Other advanced features include a carbon composite nozzle throat that makes possible the high-temperature, long-duration firing of the IUS motors and a redundant computer system in which the second computer is capable of taking over functions from the primary computer, if necessary.

The IUS is 17 ft. long, 9 ft. in diameter and weighs more than 32,000 lbs., including 27,000 lbs. of solid fuel propellant.

The IUS consists of an aft skirt, an aft stage containing 21,000 lbs. of solid propellant which generates 45,000 lbs. of thrust, an interstage, a forward stage containing 6,000 lbs. of propellant generating 18,500 lbs. of thrust and an equipment support section. The equipment support section contains the avionics which provide guidance, navigation, telemetry, command and data management, reaction control and electrical power.

The IUS is built by Boeing Aerospace, Seattle, under contract to the U.S. Air Force Systems Command. Marshall Space Flight Center, Huntsville, Ala., is NASA's lead center for IUS development and program management of NASA-configured IUSs procured from the Air Force.

TDRS-A was placed into an elliptical Earth orbit by an IUS in April 1983 during mission STS-6. TDRS-B and its IUS were lost in the Challenger accident in January 1986.

SECONDARY PAYLOADS

Physical Vapor Transport of Organic Solids

3M Company scientists will fly an experiment on STS-26 to produce organic thin films with ordered crystalline structures and to study their optical, electrical and chemical properties.

They call the experiment the Physical Vapor Transport of Organic Solids (PVTOS), a name derived from the method which is employed to produce organic crystals -- vapor transport.

Engaged in a long-term space research program that will extend into the Space Station era, 3M's primary objective with the STS-26 experiment is to build upon the knowledge gained from an earlier flight of the apparatus aboard Discovery in 1985.

For more than a decade, 3M scientists have conducted research into ordered organic thin films with an emphasis on controlling the film's physical structure properties so as to affect the film's optical, electrical and chemical behavior.

Using the physical vapor transport technique in the micro gravity environment of low-Earth orbit allows 3M scientists a unique opportunity to investigate certain materials of interest. The results could eventually be applied to production of specialized thin films on Earth or in space.

The PVTOS experiment consists of nine independent cells 12 inches long and 3 inches in diameter. Each cell contains a test tube-like ampoule containing organic material. During space flight, the organic material is vaporized. Migrating through a buffer gas, the vaporized material forms a highly ordered thin film on a flat surface. After the samples are returned to Earth, 3M scientists will study the films produced in space.

The PVTOS experiment, sponsored by NASA's Office of Commercial Programs, is being conducted by 3M's Space Research and Applications Laboratory, headed by Dr. Christopher N. Chow. Dr. Mark Debe is principal investigator with Dr. Earl Cook as co-investigator.

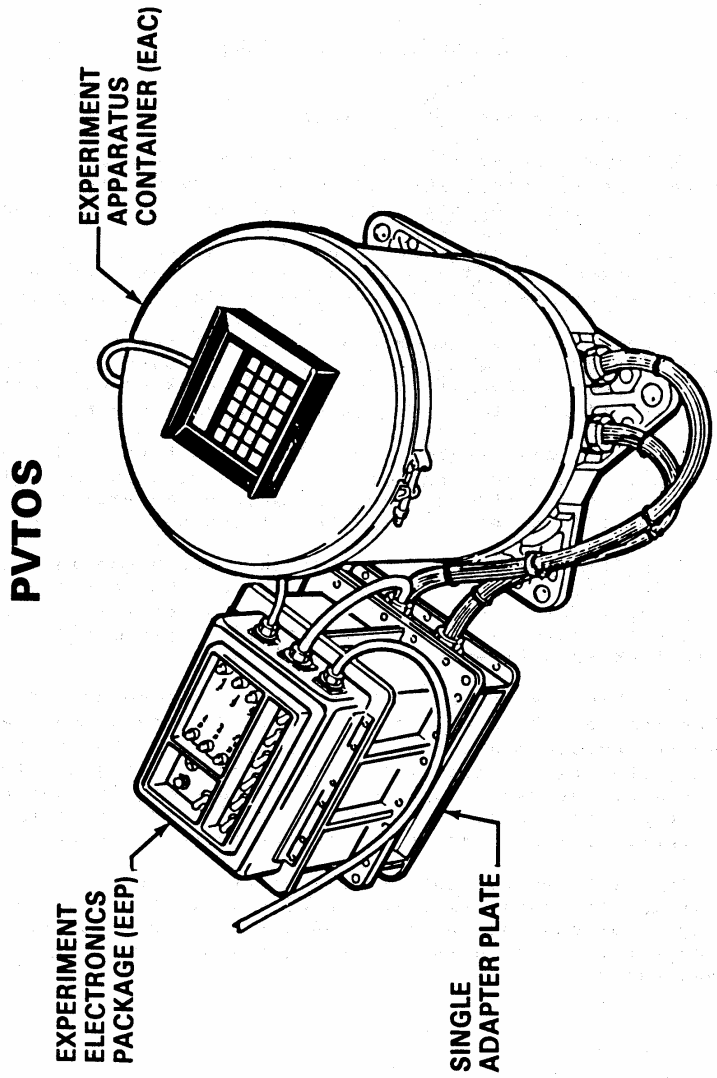
PVTOS
EXPERIMENT ELECTRONICS PACKAGE (EEP)
EXPERIMENT APPARATUS CONTAINER (EAC)
SINGLE ADAPTER PLATE

Protein Crystal Growth Experiment

Protein Crystal Growth (PCG) experiments to be conducted during STS-26 are expected to help advance a technology attracting intense interest from major pharmaceutical houses, the biotech industry and agrochemical companies.

A team of industry, university and government research investigators will explore the potential advantages of using protein crystals grown in space to determine the complex, three-dimensional structure of specific protein molecules.

Knowing the precise structure of these complex molecules provides the key to understanding their biological function and could lead to methods of altering or controlling the function in ways that may result in new drugs.

It is through sophisticated analysis of a protein in crystallized form that scientists are able to construct a model of the molecular structure. The problem is that protein crystals grown on Earth are often small and flawed. Protein crystal growth experiments flown on four previous Space Shuttle missions already have shown promising evidence that superior crystals can be obtained in the microgravity environment of space flight.

To further develop the scientific and technological foundation for protein crystal growth in space, NASA's Office of Commercial Programs and Microgravity Science and Applications Division are co-sponsoring the STS 26 experiments which are being managed through the Marshall Space Flight Center, Huntsville, AL.

During the flight, 60 different crystal growth experiments, including as many as ten distinct proteins, will be attempted in an experiment apparatus that fits into one of the Shuttle orbiter's middeck lockers.

Shortly after achieving orbit, astronauts will initiate the crystal growing process, which will continue for several days. The experiment apparatus, being flown for the first time on STS-26, differs from previous protein crystal payloads in that it provides temperature control and automation of some processes.

After Discovery's landing, the experiment hardware and protein crystals will be turned over to the investigating team for analysis. Lead investigator for the research team is Dr. Charles E. Bugg of the University of Alabama-Birmingham (UAB). Dr. Bugg is director of the Center for Macromolecular Crystallography, a NASA-sponsored Center for the Commercial Development of Space located at UAB.

Five industrial affiliates of the Center will provide samples to investigate the quality of protein crystals grown in space. Following post-flight analysis, crystals produced on the flight will be used by the participating industrial scientists for applied research.

The industrial participants and their experiments are:

Burroughs Wellcome Co., Research Triangle Park, NC, is experimenting with the enzyme reverse transcriptase. The enzyme is a chemical key to the replication of the AIDS virus. More detailed knowledge of its three-dimensional structure could lead to new drug treatments for AIDS. The investigators are Dr. Tom Krenitsky, Burroughs Wellcome Co. and Dr. David Stammers, Wellcome Research Laboratories.

The Du Pont Company, Wilmington, Del., is conducting two experiments aimed at growing crystals of proteins important to life science research. One is isocystrate lyase, a target enzyme for fungicides. Better understanding of this enzyme should lead to more potent fungicides to treat serious crop diseases such as rice blast. The other protein is alpha 1-B, the first totally synthetic peptide which was recently synthesized by Du Pont to mimic ion channels in cell membranes. Research on alpha 1-B will lead to a better understanding of the manner in which cells selectively regulate the flow of ions such as potassium, sodium, and calcium in and out of the cell. It has important potential in therapeutics and diagnostics. Du Pont's principal investigator is Dr. Ray Salemme.

Merck, Rahway, N.J., will fly a sample of elastace, an enzyme associated with the degradation of lung tissue in people suffering from emphysema. A more detailed knowledge of this enzyme's structure will be useful in studying the causes of this debilitating disease. The company's principal investigator is Dr. Manuel Navia.

Schering-Plough, Madison, N.J., will experiment to grow crystals of alpha interferon. Interferon, a protein, stimulates the body's immune system. Marketed as "Intron A," the company's alpha interferon is approved in the U.S. for treating a cancer, hairy cell leukemia, and a viral infection, genital warts. It is also approved overseas for treating these and a number of other cancers and ailments. The principal investigator is Dr. T.J. Nagabhushan.

Upjohn, Kalamazoo, Mich., is flying two protein samples: genetically-engineered human renin and phospholipase A2, found in the venom of the cottonmouth snake. Human renin is produced by the kidneys and plays a major role in the chemical reaction that controls blood pressure. Phospholipase performs functions associated with cell membranes, and a better understanding of it could lead to improved medications for pain and inflammation. Upjohn's principal investigator is Dr. Howard Einspahr.

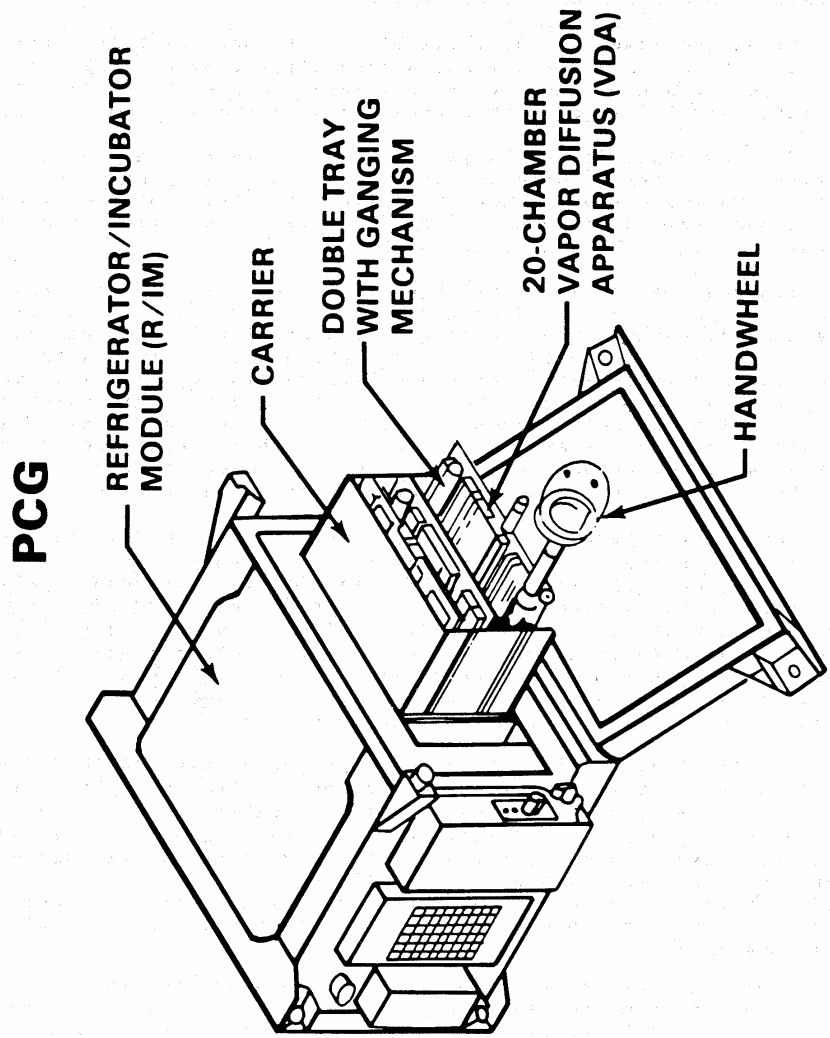
PCG
REFRIGERATOR/INCUBATOR MODULE (R/IM)
CARRIER
DOUBLE TRAY WITH GANGING MECHANISM
20-CHAMBER VAPOR DIFFUSION APPARATUS (VDA)
HANDWHEEL

Infrared Communications Flight Experiment

Using the same kind of invisible light that remotely controls our home TV sets and VCRs, mission specialist George "Pinky" Nelson is to conduct experimental voice communications with his STS-26 crewmates via infrared, rather than standard radio frequency waves.

On a non-interfering basis and during non-critical normal crew activities requiring voice operations, Nelson will unstow the Infrared Communications Flight Experiment (IRCFE) from the middeck locker and begin a minimum of 2 hours of experimentation from both flight- and middeck locations.

Six small infrared transmitters and receivers (three each) will be attached by Velcro to Discovery's walls: two each on the flight deck and one each on the middeck. The transmitters and receivers are connected by cable to a base unit which also will be attached by Velcro to a middeck wall. Nelson will plug his standard lightweight headset into a belt-mounted unit which will transmit his voice via infrared lightwaves through the receivers to the base unit. There, the signal will be relayed to other crew members using the standard Orbiter audio distribution system. Communications back to Nelson from the other astronauts will travel by the reverse path.

One major objective of the experiment is to demonstrate the feasibility of the secure transmission of information via infrared light. Unlike radio frequency (RF) signals, infrared waves will not pass through the orbiter's windows; thus, a secure voice environment would be created if infrared waves were used as the sole means of communications within the orbiter. Infrared waves also can carry data as well as voice (e.g., biomedical information). Future infrared systems are expected to be smaller, lighter weight and produce better voice quality than their RF counterparts.

A clear line-of-sight path is not required between transmitter and receiver to insure voice transmission. Infrared light will reflect from most surfaces and therefore, quality voice can be transmitted even after multiple bounces. As Nelson moves around the vehicle, another major objective is to demonstrate a "flooded volume approach," that is, to see if the wall-mounted transmitters/receivers will pick up and deliver infrared signals without the need for him to precisely align his transmitter with a target receiver.

The amount of coverage and/or blockage which occurs during the experiment under microgravity conditions is a critical objective of the experiment. Comments by Nelson and his crewmates on the effectiveness and quality of the system will be relied on heavily. Post-flight analysis of the infrared system's voice quality also will be made through tape comparisons.

While the IRCFE calls for a minimum of 2 hours of experimentation, there are no constraints on continuing use of the system beyond that time. However, the experiment must be restowed in its locker prior to descent. The 20-lb. IRCFE package, which includes a complete back-up unit, fits in less than 1/2 of a 2-cubic-ft. middeck locker.

If proven effective, the technique of using infrared light as a voice and information carrier could have widespread application including incorporation in the Shuttle, Spacelab and the Space Station as well as potential non-NASA uses in military aircraft, naval ships and Army combat vehicles.

The IRCFE was developed at a cost of approximately $500,000 by Johnson Space Center, Houston, and its contractor, Wilton Industries, Danbury, Conn. Project manager and principal investigator for the experiment is Joseph L. Prather, of the Engineering Directorate's Tracking and Communications Division at JSC.

IRCFE

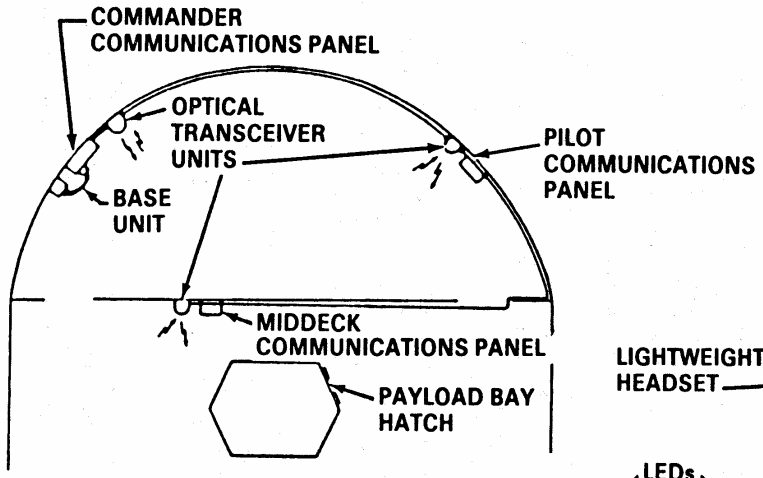

WALL-MOUNTED UNIT CABLING CONFIGURATION

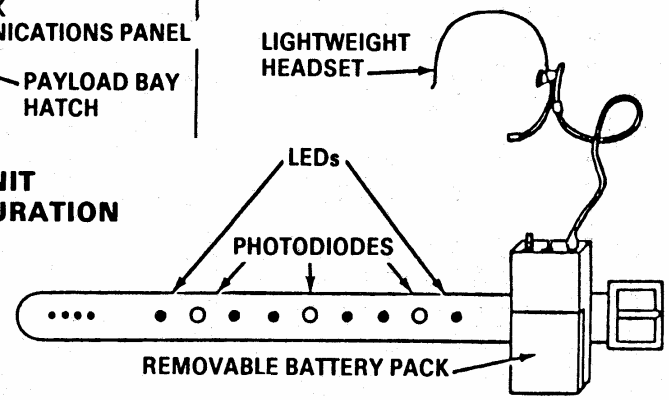

CREW-WORN UNIT

Automated Directional Solidification Furnace

The Automated Directional Solidification Furnace (ADSF) is a special space furnace developed and managed by Marshall Space Flight Center. It is designed to demonstrate the possibility of producing lighter, stronger and better-performing magnetic composite materials in a microgravity environment.

Four furnace modules are included in the ADSF, each processing a single sample. The samples being used during the STS-26 mission are manganese and bismuth composites. They will be processed at a constant melting and resolidification speed of one about a third of an inch an hour. The total process times will be 10.5 hours per sample.

Material processed during the mission will be compared with samples of the same metallic alloys processed in laboratories on Earth, as well as from previous Shuttle and sounding rocket flights. Thermal, X-ray, chemical, structural and magnetic analysis will be made following the flight to determine differences in the various samples.

The furnace is specially designed to melt along a plane in a long, slim, magnetic composite sample and then cool the molten metal behind the melt. The furnace module traverses the sample in a single direction, melting and then resolidifying the material as it goes.

The ADSF flight hardware is housed in three separate containers connected by power and data cables. The four furnaces are housed in one container; another container has the electronic assembly which controls furnace operations and yet another houses the control switches, status indicators and a system which records data produced during the operation of the furnaces.

The total flight package weighs about 250 lbs. and occupies the space of five crew lockers in the orbiter middeck. The equipment is highly automated and requires crew interaction only to initiate the operation of the furnaces.

All the ADSF hardware is reusable. The furnace apparatus was first flown aboard sounding rockets. It has been modified to be compatible with the orbiter and crew interface requirements and to increase the furnace operating time.

Each furnace can now operate up to 20 hours, compared to a total of 5 minutes during the sounding rocket flights. The experiment most recently flew aboard STS 51-G.

Principal investigator for this experiment is Dr. David Larson, Grumman Aerospace Corp. MSFC manages the development of the hardware and provides mission integration management for NASA. Project manager is Fred Reeves, MSFC, and mission manager is Richard E. Valentine, also MSFC.

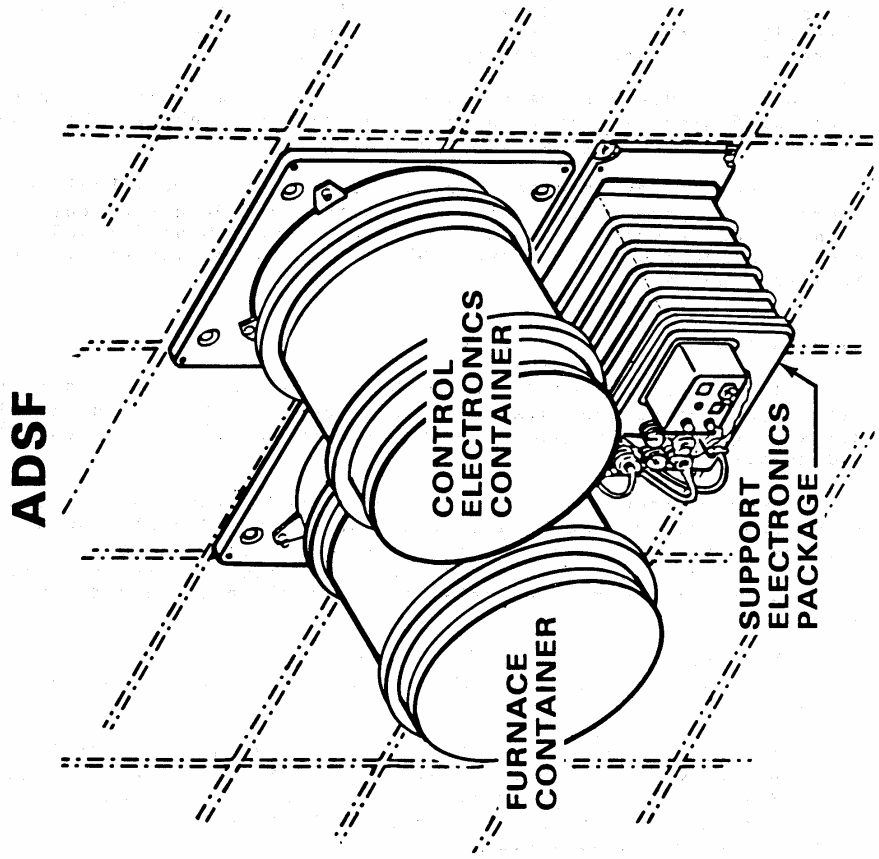
ADSF
CONTROL ELECTRONICS CONTAINER
FURNACE CONTAINER
SUPPORT ELECTRONICS PACKAGE

Aggregation of Red Blood Cells

Blood samples from donors with such medical conditions as heart disease, hypertension, diabetes and cancer will fly in an experiment called Aggregation of Red Blood Cells (ARC) developed by Australia and managed by MSFC.

The experiment is designed to provide information on the formation rate, structure and organization of red cell clumps, as well as on the thickness of whole blood cell aggregates at high and low flow rates. It will help determine if microgravity can play a beneficial role in new and existing clinical research and medical diagnostic tests.

The first ARC experiment flew aboard STS 51-C in January 1985. The STS-26 experiment differs from its predecessor only in the samples tested. The experiment hardware is unchanged.

The flight hardware weighs about 165 lbs. and is installed in three middeck lockers in the crew cabin. The experiment consists of a blood pump and storage subsystem, thermal control system, pressure transducer and an electronics equipment package to provide automated control and data acquisition.

The ARC experiment uses eight experiment blood samples maintained at about 40 degrees F. Each flows one sample at a time, into a viscometer, two optically transparent polished glass plates separated by a spacer of platinum foil.

Two 35mm cameras, located on either side of the viscometer, photograph the samples through 10x and 300x power microscopes. The 10x power microscope uses black and white film and the 300x power uses color.

After taking the photographic and low-rate data, the sample is discarded in a waste container. A saline solution, stored in syringes identical to those containing the blood samples, is then used to flush the system prior to running the next sample.

All procedures are operated by the electronic equipment package except activation which is performed by one of the crew. Running time is about 8 hours.

Results obtained in the Shuttle microgravity environment will be compared with results from a ground-based experiment to determine what effects gravity has on the kinetics and morphology of the sampled blood. The ground-based experiment will be conducted simultaneously with the flight experiment using samples identical in origin to the flight samples and functionally identical hardware.

The experiment and hardware were developed by Dr. Leopold Dintenfass of the Kanematsu Institute, Department of Medical Research, Sydney, Australia. Richard E. Valentine, MSFC, is mission manager.

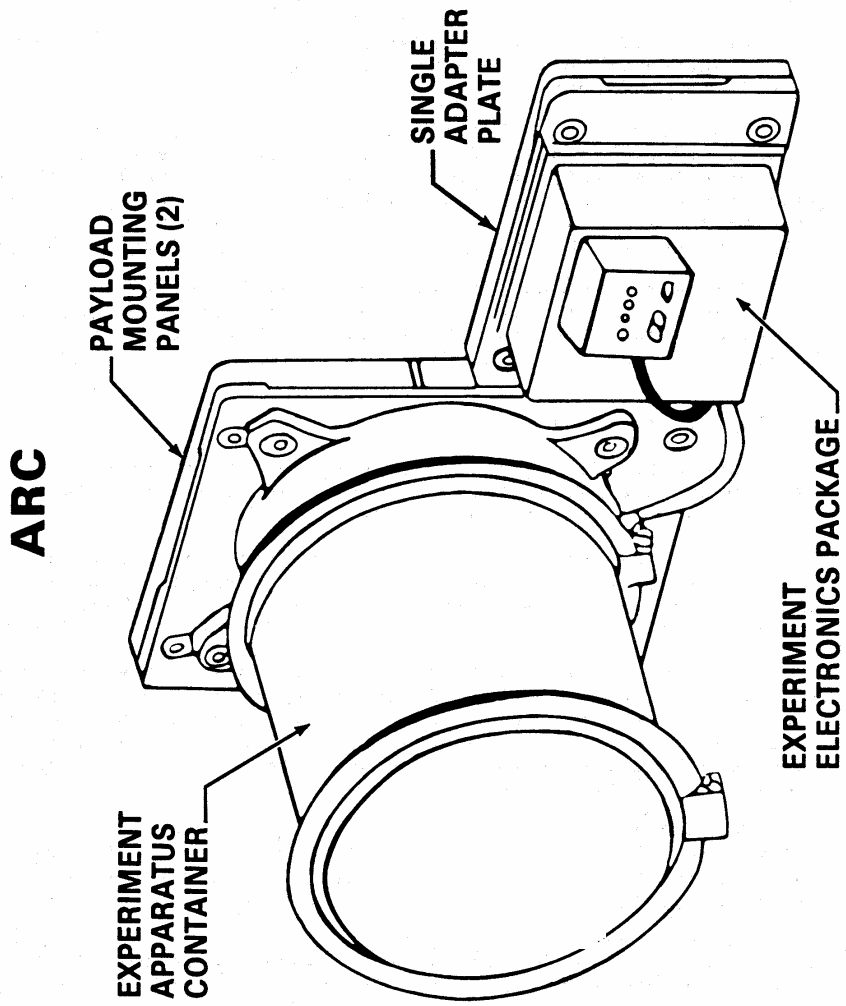
ARC
PAYLOAD MOUNTING PANELS (2)
SINGLE ADAPTER PLATE
EXPERIMENT APPARATUS CONTAINER
EXPERIMENT ELECTRONICS PACKAGE

Isoelectric Focusing

Isoelectric Focusing (IEF) is a type of electrophoresis experiment which separates proteins in an electric field according to their surface electrical charge.

Three other electrophoresis experiments have flown before on Shuttle missions. They were the McDonnell Douglas Continuous Flow Electrophoresis System, NASA's Electrophoresis Equipment Verification Test and an earlier version of the IEF.

The isoelectric focusing technique applies an electric field to a column of conducting liquid containing certain molecules which create a pH gradient in the column (alkalinity at one end, acidity at the other end). This pH gradient causes the biological sample to move to a location in the column where it has a zero charge - its isoelectric point.

Protein and fluid-filled experiment columns are provided by the University of Arizona. The remainder of the flight hardware was designed and built by laboratory personnel at MSFC, which is providing mission management.

The 65-pound experiment consists of eight glass columns containing protein, hemoglobin and albumen, with solutions which form the pH gradient column of conducting liquid.

The columns are arranged in a row in the field of view of a 35 mm camera. The experiment is housed in a 9-inch-high, 19 by 21-inch rectangular metal container and is installed in place of a middeck locker in the crew cabin.

A crewmember will activate the equipment 23 hours into the flight. The experiment will operate for 90 minutes with pictures of the separations being taken every 2 or 3 minutes. The crew member will return to the experiment hardware at the end of the running time to verify that it has successfully turned itself off.

The film from the experiment camera will be removed for processing upon orbiter landing. The samples themselves are not required for post-mission analysis.

Principal investigator on the experiment is professor Milan Bier of the University of Arizona. Co-investigator is Dr. Robert Snyder of the Separation Processes Branch at MSFC's Space Science Laboratory. Richard E. Valentine, MSFC, is the mission manager and Brian Barnett, MSFC, is the experiment coordinator.

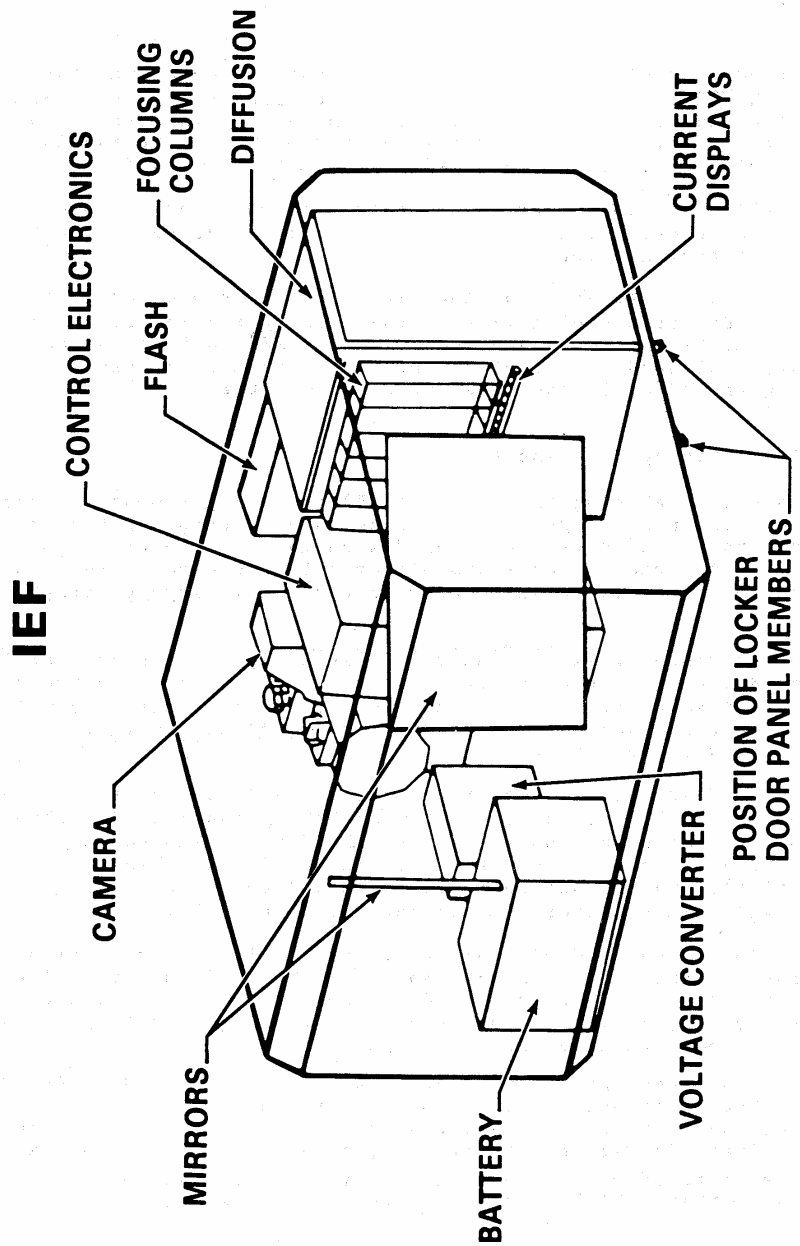
IEF
CONTROL ELECTRONICS
FOCUSING COLUMNS
DIFFUSION
FLASH
CAMERA
MIRRORS
BATTERY
CURRENT DISPLAYS
POSITION OF LOCKER DOOR PANEL MEMBERS
VOLTAGE CONVERTER

Mesoscale Lightning Experiment

Mesoscale Lightning Experiment (MLE) is an experiment designed to obtain night time images of lightning in an attempt to better understand the effects of lightning discharges on each other, on nearby storm systems and on storm microbursts and wind patterns and to determine interrelationships over an extremely large geographical area.

The experiment will use Shuttle payload bay cameras to observe lightning discharges at night from active storms. The experiment uses color video cameras and a 35mm hand-held film camera and will provide synoptic coverage of an area roughly 200 by 150 miles directly below the Shuttle.

Shuttle crewmembers also will document mesoscale storm systems that are oblique to the Shuttle but near NASA ground-based lightning detection systems at Marshall Space Flight Center, Kennedy Space Center, Stennis Space Center (formerly National Space Technology Laboratories), and the National Oceanic and Atmosphere Administration Severe Storms Laboratory, Norman, OK.

The Shuttle payload bay camera system provides camera orientation data so that the locations and dimensions of the lightning discharges recorded can be easily determined from the video and film images. The imagery will be analyzed for the frequency of flashes, the size of the lightning and its brightness.

Three co-investigators will analyze the lightning data taken from the Shuttle as well as corroborate information received from the ground-based lightning monitoring network. They are Dr. Bernard Vonnegut, State University of New York, Albany; Dr. Max Brook, New Mexico Institute of Mining and Technology, Socorro; and Otha H. Vaughan Jr., MSFC. Richard E. Valentine, MSFC, is the mission manager.

Phase Partitioning Experiment

One of the most important aspects of biotechnical and biomedical technology involves separation processes. Cell types producing important compounds must be separated from other cell types. Cells with important biomedical characteristics must be isolated to study those characteristics. This experiment involves a separation method termed two-phase partitioning.

The Phase Partitioning Experiment (PPE) is designed to fine tune understanding of the role gravity and other physical forces play in separating, i.e., partitioning biological substances between two unmixable liquid phases.

Most people are use to the two-phase systems formed by mixing oil and water. In PPE, the systems are simple saline solutions containing two different polymers. When the polymers are dissolved in solution, they separate. On Earth this results in the lighter phase floating on top of the heavier one. In space the demixed phases exhibit more complex behavior, looking somewhat like an egg which has a yolk floating inside of the egg white.

Phase partitioning has been shown on Earth to yield more effective, large-scale cell separations than any other method, differentiating cells on the basis of their surface properties. Space experiments should improve efficiency of Earth-bound partitioning and may allow scientists to carryout cell separations unobtainable on Earth.

The experiment is part of a category of handheld microgravity experiments designed to study the effects of the low gravity of spaceflight on selected physical processes.

The experiment consists of an 18-chambered experimental module filled with small quantities of two-phase systems, each differing in various physical parameters (e.g. viscosity). The module will be shaken to mix the phases and the separation of the phases will be photographed periodically by a mission specialist.

The experiment will last approximately 2 hours. The 0.7 kilogram module is completely self-contained and will be stored in one of the middeck storage lockers.

Photos of the separation will be taken with a 35mm Nikon camera equipped with an hour/minute/second time-tag using a 35-70 mm macro zoom lens. The photos will be studied when they are returned to Earth and analyzed by computer-aided densitometry for demixing-versus-time-kinetic information.

A 15-chamber version of the PPE was successfully flown on STS 51-D, and the experiment is being considered for at least two more flights.

The experiment was developed and is being managed by the Marshall Space Flight Center, Huntsville, Ala. The project is sponsored by NASA's Microgravity Science and Applications Division.

The PPE scientific team includes Drs. Donald E. Brooks, principal investigator, University of British Columbia; J. Milton Harris, University of Alabama-Huntsville; James M. Van Alstine, Universities Space Research Associates at Marshall; Stephen Bamberger, National Research Council; and Robert S. Snyder, Marshall. Richard E. Valentine is the mission manager for PPE at Marshall.

PPE

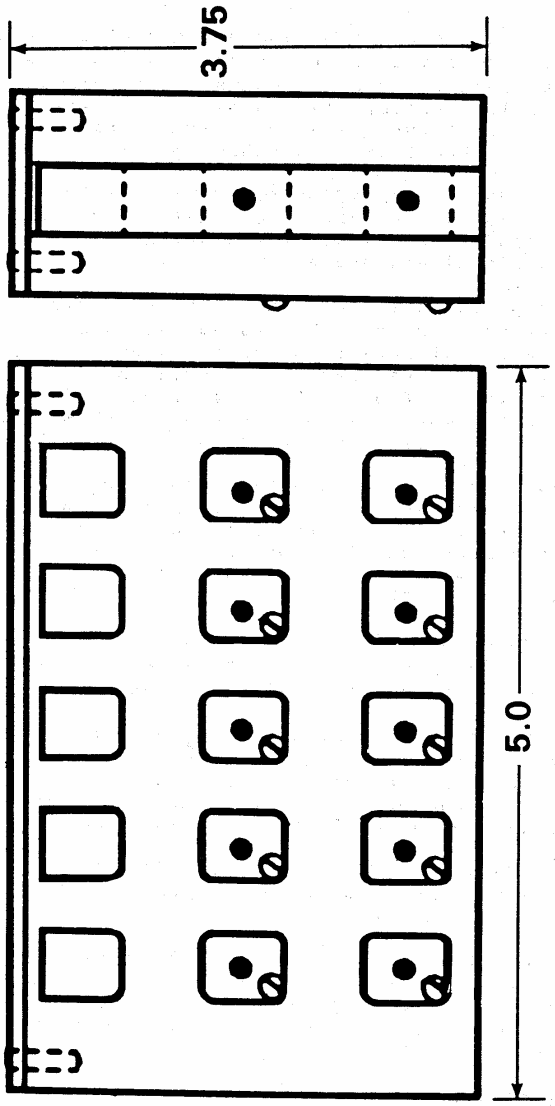

Earth-Limb Radiance Experiment

Earth Limb Radiance Experiment (ELRAD) is an experiment developed by the Barnes Engineering Co., designed to photograph the Earth's "horizon twilight glow" near sunrise and sunset.

The experiment is expected to provide photographs of the Earth's horizon that will allow scientists to measure the radiance of the twilight sky as a function of the sun's position below the horizon. This information should allow designers to develop better, more accurate horizon sensors for geosynchronous communications satellites.

Communications satellites routinely use the Earth's horizon or "limb" as a reference for attitude control. Barnes Engineering is developing an advanced horizon sensor that uses visible light to sense the Earth's limb. Near the spring and fall equinoxes, however, the Earth eclipses the sun once a day (as seen from the satellites' orbit), often for as long as 70 minutes.

During these eclipses, the Earth's horizon is invisible to a visible light horizon sensor. However, the Earth's upper atmosphere scatters sunlight to produce a thin ring of blue and ultraviolet light that would still be visible even during an eclipse. This ring of light is what ELRAD will photograph.

ELRAD consists of a 35mm Nikon camera, an 85mm lens, a blue lens filter and a timing device known as a intervalometer. Astronauts onboard the Space Shuttle will mount ELRAD in one of the Shuttle's windows and point it toward the Earth's horizon. The intervalometer will be set to take one photograph every 10 seconds. Three sequences of photographs will be taken, one just before sunrise and two just after sunset. After the mission, the exposed film will be developed by NASA and provided to Barnes Engineering, along with a sensitivity curve. Barnes Engineering will then compute the radiance of the scattered light as recorded on the film.

Principal investigator for ELRAD is William Surette, Barnes Engineering. Johnson Space Center manages the mission integration for NASA. The payload integration manager is Ed Jung and the mission manager is Willie Beckham, both from Johnson.

SHUTTLE STUDENT INVOLVEMENT PROGRAM

Utilizing a Semi-Permeable Membrane to Direct Crystal Growth

This is an experiment proposed by Richard S. Cavoli, formerly of Marlboro Central High School, Marlboro, N.Y. Cavoli is now enrolled at State University of New York, Buffalo School of Medicine, Buffalo, N.Y.

The experiment will attempt to control crystal growth through the use of a semi-permeable membrane. Lead iodide crystals will be formed as a result of a double replacement reaction. Lead acetate and potassium iodide will react to form insoluble lead iodide crystals, potassium ions and acetate ions. As the ions travel across a semi-permeable membrane, the lead and iodide ions will collide, forming the lead iodide crystal.

Cavoli's hypothesis states that the shape of the semi-permeable membrane and the concentrations of the two precursor compounds will determine the growth rate and shape of the resultant crystal without regard to other factors experienced in Earth-bound crystal growing experiments.

Following return of the experiment apparatus to Cavoli, an analysis will be performed on the crystal color, density, hardness, morphology, refractive index and electrical and thermal characteristics. Crystals of this type are useful in imaging systems for detecting gamma and X-rays and could be used in spacecraft sensors for astrophysical research purposes.

Cavoli's high school advisor is Annette M. Saturnelli of Marlboro Central High School, and his college advisor and experiment sponsor is Dr. Charles Scaife of Union College.

Effects of Weightlessness on Grain Formation and Strength in Metals

This experiment was proposed by Lloyd C. Bruce formerly of Sumner High School, St. Louis. Bruce is now a senior at the University of Missouri.

The experiment proposes to heat a titanium alloy metal filament to near the melting point to observe the effect that weightlessness has on crystal reorganization within the metal. It is expected that heating in microgravity will produce larger crystal grains and thereby, increase the inherent strength of the metal filament. The experiment uses a battery supply, a timer and thermostat to heat a titanium alloy filament to 1,000 degrees Celsius.

At a temperature of 882 degrees C, the titanium-aluminum alloy crystal lattice network undergoes a metamorphosis from closely packed hexagonal crystals to centered cubic crystals.

Following return of the experiment gear to Bruce, he will compare the space-tested alloy sample with one heated on Earth to analyze any changes in strength, size and shape of the crystal grains and any change in the homogeneity of the alloy. If necessary microscopic examination, stress testing and X-ray diffraction analysis also will be used. Any changes between the two samples could lead to variations on this experiment to be proposed for future Shuttle flights. A positive test might lead to a new, lightweight and stronger titanium-aluminum alloy or a new type of industrial process.

Bruce's student advisor is Vaughan Morrill of Sumner High School. His sponsor is McDonnell Douglas Corp., St. Louis, and his experiment advisor is Dr. Diane Chong of McDonnell Douglas.

OASIS INSTRUMENTATION

Special instrumentation to record the environment experienced by Discovery during the STS-26 mission is aboard the orbiter mounted in the payload bay.

The Orbiter Experiments Autonomous Supporting Instrumentation System (OASIS) is designed to collect and record a variety of environmental measurements during various in-flight phases of the orbiter. The primary device is a large tape recorder which is mounted on the aft, port side of the orbiter. The OASIS recorder can be commanded from the ground to store information at a low, medium or high data rate. After Discovery's mission is over, the tapes will be removed for analysis.

The information will be used to study the effects on the orbiter of temperature, pressure, vibration, sound, acceleration, stress and strain. It also will be used to assist in the design of future payloads and upper stages.

OASIS is about desk-top size, approximately 4 ft. long, 1 ft. wide, 3 ft. deep and weighs 230 lbs. It was installed for flight in the payload bay on April 18.

The OASIS data is collected from 101 sensors mounted on three primary elements. The sensors are located along the sills on either side of the payload bay, on the airborne support equipment of the Inertial Upper Stage and on the tape recorder itself. These sensors are connected to accelerometers, strain gauges, microphones, pressure gauges and various thermal devices on the orbiter.

OASIS was exercised during the flight readiness firing of the Space Shuttle Discovery in August and data was collected for analysis.

On STS-26 launch day, the system will be turned on 9 minutes before Discovery's liftoff to begin recording at high speed and recover high fidelity data. Following the first burn of the orbital maneuvering system, it will be switched to the low data rate. It will be commanded again to high speed for subsequent Shuttle OMS burns.

Different data rates are to be commanded from the ground to OASIS at various times during the on-orbit operations. If tape remains, the recorder will operate during descent.

NASA is flying OASIS aboard Discovery in support of the IUS program office of the Air Force Space Division. The system was developed by Lockheed Engineering and Management Services Co. under a NASA contract. Development was sponsored by the Air Force Space Division.

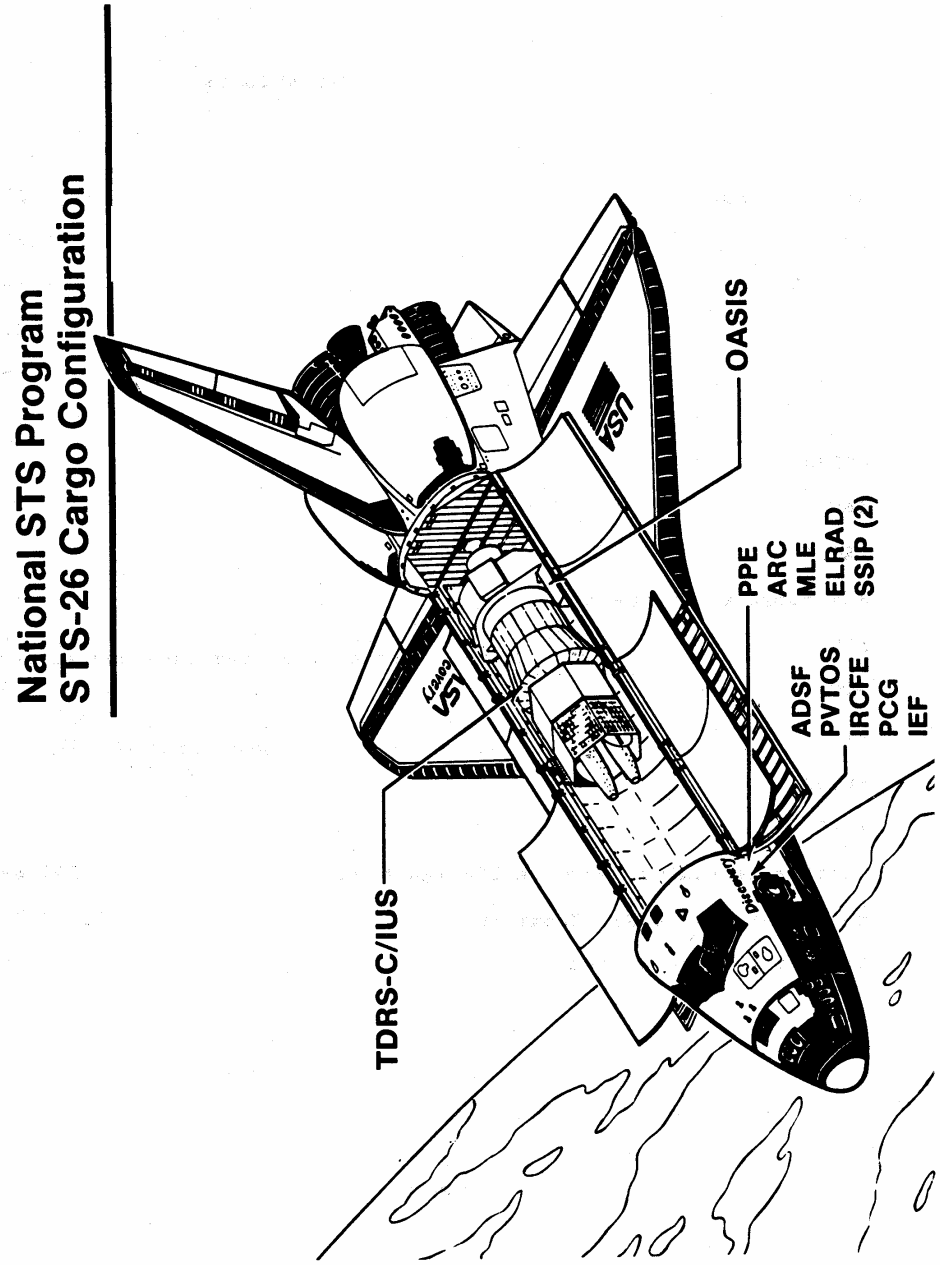
National STS Program
STS-26 Cargo Configuration
TDRS-C/IUS
OASIS
PPE
ARC
MLE
ELRAD
SSIP (2)
ADSF
PVTOS
IRCFE
PCG
IEF

STS-26 PAYLOAD AND VEHICLE WEIGHTS

	Pounds
Orbiter Empty	176, 019
IUS	32,618
TDRS-C	4,905
OASIS	I 223
ADSF	266
ARC	168
ELRAD	3
IEF	66
IRCFE	9
IUS Support Equipment	176
MLE	15
PCG	97
PPE	2
PVTOS	184
SSIP (2)	42
Orbiter Including Cargo at SRB Ignition	253,693
Total Vehicle at SRB Ignition	4,521,762
Orbiter Landing Weight	194,800

MAJOR ORBITER MODIFICATIONS

More than 100 mandatory modifications to the orbiter Discovery were completed before returning to flight. Major modifications include:

- Brake Improvements -- This included changes to eliminate mechanical and thermally-induced brake damage, improve steering margin and reduce the effects of tire damage or failure. Modifications for first flight are the thicker stators, stiffened main landing gear axles, tire pressure monitoring and anti-skid avionics.

- 17-Inch Disconnect -- A positive hold-open latch design feature for the main propulsion system disconnect valves between the orbiter and the external tank (ET) was developed to ensure that the valve remains open during powered flight until nominal ET separation is initiated.

- Reaction Control System Engines -- The RCS engines provide on-orbit attitude control and have been modified to turn off automatically in the event any combustion instability were to cause chamber wall burnthrough.

- Thermal Protection System -- The TPS was improved in areas on the orbiter in the wing elevon cove region, nose landing gear door, lower wing surface trailing edge and elevon leading edge.

- Auxiliary Power Unit -- An electrical interlock has been added to the APU tank shutoff valves to preclude electrical failures that could overheat the valves and cause decomposition of the fuel (hydrazine).

- Orbital Maneuvering System -- To prevent development of leaks as a result of improper manufacturing processes, bellows in critical OMS propellant line valves have been replaced.

- Crew Escape System -- A pyrotechnically jettisoned side hatch, crew parachutes and survival gear and a curved telescoping pole to aid the crew in clearing the wing, have been added to give a bail-out capability in the event of a problem where runway landing is not possible. An egress slide has been added to facilitate rapid post-landing egress from the vehicle under emergency conditions.

SOLID ROCKET MOTOR REDESIGN

On June 13, 1986, the President directed NASA to implement the recommendations of the Presidential Commission on the Space Shuttle Challenger Accident. As part of satisfying those recommendations, NASA developed a plan to provide a redesigned solid rocket motor (SRM).

The primary objective of the redesign effort was to provide an SRM that is safe to fly. A secondary objective was to minimize the impact on the launch schedule by using existing hardware, to the extent practical, without compromising safety.

A redesign team was established which included participation from Marshall Space Flight Center; Morton Thiokol, NASA's prime contractor for the SRM; other NASA centers; contractors and experts from outside NASA.

All aspects of the existing SRM were assessed. Design changes were deemed necessary in the field joint, case-to-nozzle joint, nozzle, factory joint, local propellant grain contour, ignition system and ground support equipment. Design criteria were established for each component to ensure a safe design with an adequate margin of safety.

Design

Field Joint -- The field joint metal parts, internal case insulation and seals were redesigned and a weather protection system was added.

In the STS 51-L design, the application of actuating pressure to the upstream face of the o-ring was essential for proper joint sealing performance because large sealing gaps were created by pressure-induced deflections, compounded by significantly reduced o-ring sealing performance at low temperature.

The major motor case change is the new tang capture feature which provides a positive metal-to-metal interference fit around the circumference of the tang and clevis ends of the mating segments. The interference fit limits the deflection between the tang and clevis o-ring sealing surfaces due to motor pressure and structural loads. The joints are designed so the seals will not leak under twice the expected structural deflection and rate.

External heaters with integral weather seals were incorporated to maintain the joint and o-ring temperature at a minimum of 75 degrees F. The weather seal also prevents water intrusion into the joint.

The new design, with the tang capture feature, the interference fit and the use of custom shims between the outer surface of the tang and inner surface of the outer clevis leg, controls the o-ring sealing gap dimension.

The sealing gap and the o-ring seals are designed so there is always a positive compression (squeeze) on the o-rings. The minimum and maximum squeeze requirements include the effects of temperature, o-ring resiliency and compression set and pressure. The clevis o-ring groove dimension has been increased so the o-ring never fills more than 90 percent of the o-ring groove, enhancing pressure actuation.

The new field joint design also includes a new o-ring in the capture feature and an additional leak check port to assure that the primary o-ring is positioned in the proper sealing direction at ignition. This new or third o-ring also serves as a thermal barrier should the sealed insulation be breached. Although not demanded by the specification, it has proved to be an excellent hot gas seal.

The field joint internal case insulation was modified to be sealed with a pressure actuated flap called a J-seal, rather than with putty as in the STS 51-L configuration.

Longer field joint case mating pins, with a reconfigured retainer band, were added to improve the shear strength of the pins and increase the margin of safety in the metal parts of the joint.

Case-to-Nozzle Joint -- The SRM case-to-nozzle joint, which experienced several instances of o-ring erosion in flight, has been redesigned to the same criteria imposed upon the case field joint.

Similar to the field joint, case-to-nozzle joint modifications have been made in the metal parts, internal insulation and o-rings. Radial bolts with "Stat-O-Seals" were added to minimize the joint sealing gap opening.

The internal insulation was modified to be sealed adhesively and a third o-ring included. The third o-ring serves as a dam or wiper in front of the primary o-ring to prevent the polysulfide adhesive from being extruded into the primary o-ring groove. It also serves as a thermal barrier should the polysulfide adhesive be breached. Like the third o-ring in the field joint, it has proven to be an effective hot gas seal.

The polysulfide adhesive replaces the putty used in the 51-L joint. Also, an additional leak check port was added to reduce the amount of trapped air in the joint during the nozzle installation process and aid in the leak check procedure.

Nozzle -- The internal joints of the nozzle metal parts have been redesigned to incorporate redundant and verifiable o-rings at each joint. The nozzle steel fixed housing part has been redesigned to permit incorporation of 100 radial bolts that attach the fixed housing to the case aft dome.

Improved bonding techniques are used for the nozzle nose inlet, cowl/boot and aft exit cone assemblies. The nose inlet assembly metal part to ablative parts bondline distortion has been eliminated by increasing the thickness of the aluminum nose inlet housing and improving the bonding process. The tape wrap angle of the carbon cloth fabric in the areas of the nose inlet and throat assembly parts were changed to improve the ablative insulation erosion tolerance.

Some of these ply angle changes were in progress prior to the STS 51-L accident. The cowl and outer boot ring has additional structural support with increased thickness and contour changes to increase their margins of safety. Additionally, the outer boot ring ply configuration was altered.

Factory Joint -- Minor modifications were made in the case factory joints by increasing the insulation thickness and altering the lay-up to increase the margin of safety on the internal insulation. Longer pins also were added, along with a reconfigured retainer band and new weather seal to improve the factory joint performance and increase the margin of safety. The o-ring and o-ring groove size also were changed consistent with the field joint.

Propellant -- The motor propellant forward transition region was recontoured to reduce the stress fields between the star and cylindrical portions of the propellant grain.

Ignition System -- Several minor modifications were incorporated into the ignition system. The aft end of the igniter steel case, which contains the igniter nozzle insert, was thickened to eliminate a localized weakness. The igniter internal case insulation was tapered to improve the manufacturing process.

Ground Support Equipment -- The Ground Support Equipment (GSE) has been redesigned to minimize the case distortion during handling at the launch site; to improve the segment tang and clevis joint measurement system for more accurate reading of case diameters to facilitate stacking; to minimize the risk of o-ring damage during joint mating; and to improve leak testing of the igniter, case and nozzle field joints.

Other GSE modifications include transportation monitoring equipment and lifting beam.

Test Program

An extensive test program was conducted to certify the redesigned motor for flight. Test activities included laboratory and component tests, subscale tests, simulator tests and full scale tests.

Laboratory and component tests were used to determine component properties and characteristics. Subscale tests were used to simulate gas dynamics and thermal conditions for components and subsystem design. Simulator tests, consisting of motors using full size flight type segments, were used to verify joint design under full flight loads, pressure and temperature. Full scale tests were used to verify analytical models; determine hardware assembly characteristics; determine joint deflection characteristics; determine joint performance under full duration, hot gas tests including joint flaws and flight loads; and determine redesigned hardware structural characteristics.

Five full scale, full duration motor static firing tests were conducted prior to STS-26 to verify the redesigned solid rocket motor performance. These included two development motor tests, two qualification motor (QM) tests, and a production verification motor test. Additionally, one post-STS-26 QM test is scheduled in late December to certify the redesigned motor for cold weather operation.

SPACE SHUTTLE MAIN ENGINE IMPROVEMENTS

The main engines for Space Shuttle flight STS-26 incorporate numerous improvements over those on previous flights. Through an extensive, ongoing engine test program, NASA has identified, developed, certified and implemented dozens of modifications to the Space Shuttle main engine.

In terms of hardware, areas of improvement include the electronic engine controller, valve actuators, temperature sensors, main combustion chamber and the turbopumps.

In the high pressure turbomachinery, improvements have focused on the turbine blades and bearings to increase margin and durability. The main combustion chamber has been strengthened by nickel-plating a welded outlet manifold to give it extended life.

Margin improvements also have been made to the five hydraulic actuators to preclude a loss in redundancy -- a situation which occurred twice on the launch pad. To address several instances of flight anomalies involving a temperature sensor in the critical engine cutoff logic, the sensor has been redesigned and extensively tested without problems.

Along with hardware improvements, several major reviews were conducted on requirements and procedures. These reviews dealt with topics such as possible failure modes and effects, and the associated critical items list. Another review involved having a launch/abort reassessment team examine all launch-commit criteria, engine redlines and software logic. A design certification review also was performed. In combination, these reviews have maximized confidence for successful engine operation.

A related effort saw Marshall engineers, working with their counterparts at the Kennedy Space Center, accomplish a comprehensive launch operations and maintenance review. This ensured that engine processing activities at the launch site are consistent with the latest operational requirements.

In parallel with the various reviews, the most aggressive ground testing program in the history of the main engine was conducted. Its primary purposes were to certify the improvements and demonstrate the engine's reliability and operating margin. It was carried out at NASA's Stennis Space Center (formerly National Space Technology Laboratories) in Mississippi and at Rocketdyne's Santa Susana Field Laboratory in California.

The other vital area of ground testing activity was checkout and acceptance of the three main engines for the STS-26 mission. Those tests, also at Stennis, began in August 1987 and all three STS-26 engines were delivered to Kennedy by January 1988.

SPACEFLIGHT TRACKING AND DATA NETWORK

One of the key elements in the Space Shuttle mission is the capability to track the spacecraft, communicate with the astronauts and obtain the telemetry data that informs ground controllers of the condition of the spacecraft and the crew.

The hub of this network is NASA's Goddard Space Flight Center, Greenbelt, Md., where the Spaceflight Tracking and Data Network (STDN) and the NASA Communications Network (NASCOM) are located.

The STDN is a complex NASA worldwide system that provides realtime communications with the Space Shuttle orbiter and crew. The network is operated by Goddard. Approximately 2,500 personnel are required to operate the system.

The NASA-controlled network consists of 14 ground stations equipped with 14-, 30- and 85-ft. S-band antenna systems and C-band radar systems, augmented by numerous Department of Defense (DOD) stations which provide C-band support and several DOD 60-ft. S-band antenna systems. S-band systems carry telemetry radio frequency transmissions. C-band stations conduct radar tracking.

In addition, there are several major computing interfaces located at the Network Control Center and at the Flight Dynamics Facility, both at Goddard; at Western Space and Missile Center (WSMC), Vandenberg AFB, CA; at White Sands Missile Range, NM; and at Eastern Space and Missile Center (ESMC), Cape Canaveral Air Force Station, FL. They provide realtime network computational support for the generation of data necessary to point antennas at the Shuttle.

The network has agreements with the governments of Australia, (Canberra and Yarragadee); Spain (Madrid); Senegal (Dakar); Chile (Santiago); United Kingdom (Ascension Island); and Bermuda to provide NASA tracking station support to the National Space Transportation System program.

Should the Mission Control Center in Houston be seriously impaired for an extended period of time, the NASA Ground Terminal (NGT) at White Sands becomes an emergency Mission Control Center, manned by Johnson Space Center personnel, with the responsibility of safely returning the orbiter to a landing site. During the transition of the flight control team from Johnson to the White Sands NASA Ground Terminal, Goddard would assume operational control of the flight.

The Merritt Island, Fla., S-band station provides the appropriate data to the Launch Control Center at Kennedy and the Mission Control Center at Johnson during pre-launch testing and the terminal countdown.

During the first minutes of launch and during the ascent phase, the Merritt Island and Ponce de Leon, Fla., S-band and Bermuda S-band stations, as well as the C-band stations located at Bermuda; Wallops Island, Va.; Antigua; Cape Canaveral; and Patrick Air Force Base, Fla., provide appropriate tracking data, both high speed and low speed, to the Kennedy and Johnson control centers.

During the orbital phase, all the S-band and some of the C-band stations, which acquire the Space Shuttle at 3 degrees above the horizon, support and provide appropriate tracking, telemetry, air-ground and command support to the Mission Control Center at Johnson through Goddard.

During the nominal entry and landing phase planned for Edwards Air Force Base, Calif., the NASA/Goldstone and Dryden Flight Research Facility, Calif., sites, and the S-band and C-band stations at the WSMC and Edwards Air Force Base, CA, provide highly-critical tracking, telemetry, command and air-ground support to the orbiter and send appropriate data to the Johnson and Kennedy control centers.

NASA-CONTROLLED TRACKING STATIONS

Location	Equipment
Ascension Island (ACN) (Atlantic Ocean)	S-band, UHF A/G
Bermuda (BDA) (Atlantic Ocean)	S- and C-band, UHF A/G
Goldstone (GDS) (California)	S-band, UHF A/G, TV
Guam (GWM) (Pacific Ocean)	S-band, UHF A/G
Hawaii (HAW) (Pacific Ocean)	S-band, UHF A/G, TV
Merritt Island (MIL)	(Florida) S-band, UHF A/G, TV
Santiago (AGO)	(Chile) S-band
Ponce de Leon (PDL) (Florida)	S-band
Madrid (RID) (Spain)	S-band
Canberra (CAN) (Australia)	S-band
Dakar (DKR) (Senegal, Africa)	S-band, UHF A/G
Wallops (WFF) (Virginia)	C-band
Yarragadee (YAR) (Australia)	UHF A/G
Dryden (DFRF) (California)	S-band, UHF A/G, C-band

The Canberra, Goldstone and Madrid stations are part of the Deep Space Network (DSN) and come under the management of NASA's Jet Propulsion Laboratory, Pasadena, Calif.

Personnel: Tracking Stations; 1,100 (500+ are local residents) Goddard Space Flight Center; 1,400

HUNTSVILLE OPERATIONS SUPPORT CENTER

The Huntsville Operations Support Center (HOSC) is a facility at NASA's Marshall Space Flight Center which supports launch activities at Kennedy Space Center, Fla. The operations center also supports powered flight and payload operations at the Johnson Space Center.

During pre-mission testing, countdown, launch and powered flight toward orbit, Marshall and contractor engineers and scientists man consoles in the support center to monitor realtime data being transmitted from the Shuttle. Their purpose is to evaluate and help solve problems that might occur with Space Shuttle propulsion system elements, including the Space Shuttle main engines, external tank and solid rocket boosters. They also will work problems with the range safety system.

The data, providing information on the "health" of these systems, are gathered by sensors aboard the Shuttle and are instantaneously transmitted from the launch site to the 2-story HOSC. There the information is processed by computers and displayed on screens and other instruments at 15 stations in the Engineering Console Room. More than 3,000 temperature, pressure, electrical voltage and other measurements are made every second. During the 10 hours of peak activity before and during launch, more that 11 million measurements are assessed by teams of experts in the support center.

Approximately 150 Marshall support center personnel have access to more than 25 direct communications lines that link them with the launch site at Kennedy Space Center, Mission Control at Johnson Space Center and with Shuttle propulsion system contractor plants.

If a problem is detected by the experts at one of the stations in the support center console room, engineers on the consoles immediately alert appropriate individuals at the Kennedy and Johnson centers, and operations center managers in the Shuttle action center, a conference room adjacent to the console room. They also pass the information to the appropriate teams of specialists in the nearby operations center working area. There are separate teams to work Space Shuttle main engine, external tank, solid rocket booster, main propulsion system and Range Safety System difficulties.

In addition to launch support, payload services are provided by teams of scientists operating out of specially equipped payload support rooms.

STS-26 MENU

FREDRICK H. (RICK) HAUCK, CDR - (RED)

Day 1*, 5**

Meal A
Pears, Dried (IM)
Sausage Patty (R)
Scrambled Eggs (R)
Bran Flakes (R) Cocoa (B)
Orange-Pineapple Drink (B)

Meal B
Ham (T)
Bread (NF)
Peaches, Diced (T)
Shortbread Cookies (NF)
Lemonade w/A/S (2X) (B)

Meal C
Teriyaki Chicken (R)
Rice & Chicken (R)
Asparagus (R)
Fruit Cocktail (T)
Orange Mango (B)

Day 2

Meal A
Peaches, Dried (IM)
Granola (R)
Mexican Scrambled Eggs (R)
Orange-Grapefruit Drink (B)

Meal B
Dried Beef (IM)
Bread (NF)
Pears, Diced (T)
Butter Cookies (NF)
Lemonade (2X) (B)

Meal C
Beef w/BBQ Sauce 8 oz (T)
Potatoes au Gratin (R)
Green Beans w/Mushrooms (R)
Pears, Diced (T)
Citrus Drink (B)

Day 3

Meal A
Apricots, Dried (IM)
Seasoned Scrambled Eggs (R)
Bran Flakes (R)
Cocoa (B)
Orange-Grapefruit Drink (B)

Meal B
Peanut Butter (IM)
Jelly (IM)
Bread (NF)
Fruit Cocktail (T)
Fruitcake (T)
Tea w/Lemon & A/S (2X) (B)

Meal C
Shrimp Cocktail (R)
Beef & Gravy 8 oz (T)
Macaroni & Cheese (R)
Green Beans w/Mushrooms (R)
Peach Ambrosia (R)
Lemonade (B)

Day 4

Meal A
Pears, Dried (IM)
Beef Patty (R)
Bran Flakes (R)
Grapefruit Drink (B)

Meal B
Ham (T)
Bread (NF)
Pineapple (T)
Cashews (NF)
Tea w/Lemon & A/S (2X) (B)

Meal C
Meatballs w/BBQ Sauce 8 oz (T)
Rice Pilaf (R)
Italian Vegetables (R)
Peaches, Diced (T)
Apple Drink (B)

* Day 1 consists of meals B and C T- Thermostabilized
** Day 5 consists of Meal A only NF- Natural Form
B - Beverage
R - Rehydratable
IM - Intermediate Moisture

RICHARD O. COVEY, PLT (YELLOW)

Day 1*, 5**

Meal A
Peaches, Diced (T)
Sausage Patty (R)
Seasoned Scrambled Eggs (R)
Breakfast Roll (NF)
Orange-Mango Drink (B)

Meal B
Tuna Salad Spread (T)
Bread (NF)
Peaches, Diced (T)
Shortbread Cookies (NF)
Lemonade (2X) (B)

Meal C
Chicken ala King 8 oz (T)
Rice & Chicken (R)
Asparagus (R)
Chocolate Pudding (T)
Tea (B)

Day 2

Meal A
Peaches, Diced (T)
Granola (R)
Granola Bar (NF)
Breakfast Roll (NF)
Orange-Grapefruit Drink (B)

Meal B
Shrimp Creole (R)
Pears, Diced (T)
Butter Cookies (NF)
Lemonade (2X) (B)

Meal C
Turkey & Gravy 8 oz (T)
Potatoes au Gratin (R)
Green Beans w/Mushrooms (R)
Butterscotch Pudding (T)
Tea (B)

Day 3

Meal A
Dried Beef (IM)
Seasoned Scrambled Eggs (R)
Bran Flakes (R)
Breakfast Roll (NF)
Orange-Mango Drink (B)

Meal B
Chicken Salad Spread (T)
Bread (NF)
Fruit Cocktail (T)
Almonds (NF)
Lemonade (2X) (B)

Meal C
Teriyaki Chicken (R)
Potato Patty (R)
Creamed Spinach (R)
Candy Coated Peanuts (NF)
Vanilla Pudding (T)
Tea (B)

Day 4

Meal A
Pears, Diced (T)
Beef Patty (R)
Bran Flakes (R)
Breakfast Roll (NF)
Grapefruit Drink (B)

Meal B
Beef Almondine (T)
Pineapple (T)
Macadamia Nuts (NF)
Lemonade (2X) (B)

Meal C
Beef w/BBQ Sauce 8 oz (T)
Rice Pilaf (R)
Italian Vegetables (R)
Chocolate Pudding (T)
Tea (B)

* Day 1 consists of Meals B and C T - Thermostabilized
** Day 5 consists of Meal A only NF - Natural Form
B - Beverage
R - Rehydratable

JOHN M. (MIKE) LOUNGE, MS-1- (BLUE)

Day 1*, 5**

Meal A
Pears
Beef Patty (R)
Seasoned Scrambled Eggs (R)
Granola w/Raisins (R)
Cocoa (B)
Orange-Mango Drink (B)

Meal B
Peanut Butter (IM)
Bread (NF)
Peaches, Diced (T)
Shortbread Cookies (NF)
Apple Drink (2X) 9B)

Meal C
Meatballs w/BBQ Sce 8 oz (T)
Rice & Chicken (R)
Asparagus (R)
Chocolate Pudding (T)
Grape Drink (B)

Day 2

Meal A
Peaches, Dried (IM)
Granola w/Blueberries (R)
Breakfast Roll (NF)
Vanilla Instant Breakfast (B)
Grapefruit Drink (B)

Meal B
Tuna Salad Spread (T)
Bread (NF)
Pears, Diced (T)
Butter Cookies (NF)
Lemonade w/A/S (2X) (B)

Meal C
Beef w/BBQ Sauce 8 oz. (T)
Potatoes au Gratin (R)
Green Bean w/Mushrooms (R)
Butterscotch Pudding (T)
Orange Drink (B)

Day 3

Meal A
Apricots, Dried (IM)
Seasoned Scrambled Eggs (R)
Bran Flakes (R)
Cocoa (B)
Orange Drink Mix (B)

Meal B
Salmon (T)
Bread (NF)
Fruit Cocktail (T)
Fruitcake (T)
Tea w/Lemon & A/S (2X) (B)

Meal C
Grd Beef w/Spice Sce 8 oz (T)
Potato Patty (R)
Green Beans & Broccoli (R)
Strawberries (R)
Vanilla Pudding (T)
Tropical Punch w/A/S (B)

Day 4

Meal A
Fruit Cocktail (T)
Beef Patty (R)
Oatmeal w/Raisins & Space (R)
Breakfast Roll (NF)
Grapefruit Drink (B)

Meal B
Ham (T)
Cheddar Cheese Spread (T)
Bread (NF)
Pineapple (T)
Cashews (NF)
Lemonade w/A/S (2X) (B)

Meal C
Meatballs w/BBQ Sauce 8 oz (T)
Rice Pilaf (R)
Italian Vegetables (R)
Chocolate Pudding (T)
Apple Drink (B)

* Day 1 consists of Meals B and C IM - Intermediate Moisture
** Day 5 consists of Meal A only R - Rehydratable
B - Beverage
NF - Natural Form
T - Thermostabilized
A/S - Artificial Sweetener

DAVID C. HILMERS, MS-2 - (GREEN)

Day 1*, 5**

Meal A
Applesauce (T)
Bran Flakes (R)
Granola Bar (NF)
Orange-Mango Drink (B)

Meal B
Tuna Salad Spread (T)
Bread (NF)
Peaches, Diced (T)
Shortbread Cookies (NF)
Grapefruit Drink (2X) (B)

Meal C
Chicken ala King 8 oz (T)
Corn, Grn Bean & Pasta (R)
Creamed Spinach (R)
Fruit Cocktail (T)
Chocolate Pudding (T)
Orange-Grapefruit Drink

Day 2

Meal A
Peaches, Diced (T)
Scrambled Eggs (R)
Granola (R)
Granola Bar (NF)
Orange-Grapefruit Drink (B)

Meal B
Turkey Salad Spread (T)
Bread (NF)
Pears, Diced (T)
Trail Mix (NF)
Grapefruit Drink (2X) (B)

Meal C
Turkey Tetrazzini (R)
Potatoes au Gratin (R)
Green Bean w/Mushrooms (R)
Fruit Cocktail (T)
Apricots (IM)
Orange Drink (B)

Day 3

Meal A
Applesauce (T)
Scrambled Eggs (R)
Granola Bar (NF)
Orange Drink Mix (B)

Meal B
Turkey Salad Spread (T)
Bread (NF)
Fruit Cocktail (T)
Shortbread Cookies (NF)
Dried Peaches (IM)
Grapefruit Drink (2X) (B)

Meal C
Teriyaki Chicken (R)
Potato Patty (R)
Green Beans & Broccoli (R)
Strawberries (R)
Pineapple (T)
Grapefruit Drink (B)

Day 4

Meal A
Peaches, Diced (T)
Scrambled Eggs (R)
Oatmeal w/Brown Sugar (R)
Granola Bar (NF)
Grapefruit Drink (B)

Meal B
Cheddar Cheese Spread (T)
Bread (NF)
Applesauce (T)
Granola Bar (NF)
Apricots (IM)
Orange Drink (2X) (B)

Meal C
Turkey & Gravy 8 oz (T)
Rice Pilaf (R)
Italian Vegetables (R)
Fruit Cocktail (T)
Almonds (NF)
Grapefruit Drink (B)

* Day 1 consists of Meals B and C T - Thermostabilized
** Day 5 consists of Meal A only NF - Natural Form
B - Beverage
R - Rehydratable

GEORGE D. (PINKY) NELSON, MS-3 (ORANGE)

Day 1*, 5**

Meal A
Pineapple (T)
Sausage Patty (R)
Mexican Scrambled Eggs (R)
Granola w/Raisins (R)
Cocoa (B)
Orange-Pineapple Drink (B)
Kona Coffee (B)

Meal B
Ham Salad Spread (T)
Tortillas (NF)
Chocolate Pudding (T)
Candy Coated Chocolates (NF)
Apple Cider (2X) (B)

Meal C
Shrimp Cocktail (R)
Sweet & Sour Chicken (R)
Rice Pilaf (R)
Green Beans & Broccoli (R)
Strawberries (R)
Orange Drink Mix (B)
Kona Coffee (B)

Day 2

Meal A
Fruit Cocktail (T)
Sausage Patty (R)
Mexican Scrambled Eggs (R)
Orange Drink (B)
Kona Coffee (B)

Meal B
Frankfurters (T)
Tortillas (NF)
Chocolate Pudding (T)
Life Savers (NF)
Apple Cider (2X) (B)

Meal C
Shrimp Cocktail (R)
Beef w/BBQ Sauce 8 oz (T)
Potato Patty (R)
Italian Vegetables (R)
Peaches, Diced (T)
Vanilla Pudding (T)
Peach Drink (B), Kona Coffee (B)

Day 3

Meal A
Pineapple (T)
Sausage Patty (R)
Mexican Scrambled Eggs (R)
Orange Drink Mix (B)
Kona Coffee (B)

Meal B
Chicken Salad Spread (T)
Bread (NF)
Fruit Cocktail (T)
Chocolate Covered Cookies (NF)
Orange-Mango Drink (B)
Kona Coffee (B)

Meal C
Shrimp Cocktail (R)
Ham (T)
Potato Patty (R)
Green Beans & Broccoli (R)
Strawberries (R)
Vanilla Pudding (T)
Tropical Punch (B)
Kona Coffee (B)

Day 4

Meal A
Fruit Cocktail (T)
Beef Patty (R)
Mexican Scrambled Eggs (R)
Breakfast Roll (NF)
Grapefruit Drink (B), Kona Coffee (B)

Meal B
Frankfurters (T)
Bread (NF)
Applesauce (T)
Cashews (NF)
Apple Drink (2X) (B)

Meal C
Shrimp Cocktail (R)
Meatballs w/BBQ Sauce 8 oz (T)
Italian Vegetables (R)
Chocolate Pudding (T)
Apple Drink (B)
Kona Coffee (B)

* Day 1 consists of Meals B and C T - Thermostabilized
** Day 2 consists of Meal A only R - Rehydratable
B - Beverage
NF - Natural Form

STS 26 CONTINGENCY/PANTRY

Rehydratable Beverages	Qty
Apple Cider	5
Cocoa	5
Coffee, Black	15
Kona Coffee, Black	10
Grapefruit Drink	15
Lemonade	10
Lemonade w/A/S	10
Orange-Grapefruit Drink	5
Orange-Mango Drink	15
Tea	5
Tea w/Lemon & A/S	5
Tropical Punch	5
TOTAL	105
Snacks	
Almonds (NF)	15
Butter Cookies (NF)	5
Candy Coated Chocolates (NF)	20
Candy Coated Peanuts (NF)	20
Cashews (NF)	10
Dried Beef (IM)	15
Granola Bars (NF)	5
Macadamia Nuts (NF)	10
Peanut Butter, Crunchy (JAR) (IM)	1
Soda Crackers	10
Trail Mix (IM)	5
TOTAL	116
Drinking Water Containers	20
In-Suit Food Bars	2
Reentry Kit	
Salt Tablets (8)	5
Long Straws	20
Drinking Water Containers	20

Rehydratable Food	Qty
Soup Kit	
Chicken Consommé	8
Rice & Chicken Soup	8
Broccoli au Gratin	3
Shrimp Cocktail	10
Turkey Tetrazzini	7
TOTAL	36
Thermostabilized Food	
Beef & Gravy (8 oz)	5
Chicken Salad Spread	2
Frankfurters	3
Ham Salad Spread	3
Peaches, diced	4
Tuna Salad Spread	2
Turkey & Gravy (8 oz)	5
TOTAL	23
Fresh Food	
Apples, Red Delicious	2
Apples, Granny Smith	3
Brea, Whole Wheat	2
Breakfast Rolls, Menu plus	6
Carrot Sticks	2
Celery Sticks	2
Cheddar Cheese, 2 oz	5
Crackers, Goldfish, Plain	1
Crackers, Wheat Thins	1
Tortillas	2
TOTAL	26
Life Savers - 5 fruit flavors	

A/S - Artificial Sweetener
NF - Natural Form
IM - Intermediate Moisture

STS-26 CREWMEMBERS

S87-40673 – The official portrait of the STS-26 crewmembers includes, seated on either side of the space shuttle orbiter model, pilot Richard O. Covey (left) and mission commander Frederick H. Hauck with mission specialists (left to right) David C. Hilmers, George D. "Pinky" Nelson, and John M. Lounge standing behind them. The mission insignia and flag are displayed in background.

No copyright is asserted for this photograph. If a recognizable person appears in the photo, use for commercial purposes may infringe a right of privacy or publicity. It may not be used to state or imply the endorsement by NASA or by any NASA employee of a commercial product, process or service, or used in any other manner that might mislead. Accordingly, it is requested that if this photograph is used in advertising and other commercial promotion, layout and copy be submitted to NASA prior to release.

PHOTO CREDIT: NASA or National Aeronautics and Space Administration.

BIOGRAPHICAL DATA

FREDERICK H. (RICK) HAUCK, 47, captain, USN, is mission commander. Born in Rochester, NY, he considers Winchester, MA, and Washington, D.C., as his hometowns. Hauck was selected as an astronaut in January 1978.

He was Shuttle pilot for the seventh Space Shuttle mission (STS-7) aboard the orbiter Challenger in June 1983. During the flight, Hauck operated the Canadian-built remote manipulator system (RMS) arm, performing the first deployment and retrieval exercise with the Shuttle Pallet Satellite.

He also served as commander of Shuttle Discovery's second mission, STS 51-A, in November 1984, the first mission to retrieve satellites and return them to Earth. Hauck has logged more than 339 hours in space.

Hauck received a B.S. degree in physics from Tufts University in 1962 and an M.S. degree in nuclear engineering from the Massachusetts Institute of Technology in 1966.

A Navy ROTC student at Tufts, Hauck was commissioned in 1962 and served 20 months as a communications officer aboard the USS Warrington. He received his wings in 1968 and has since logged almost 5,000 hours flying time. Hauck flew 114 combat and combat support missions in Southeast Asia.

RICHARD O. (DICK) COVEY, 42, colonel, USAF, is the STS-26 pilot. He was born in Fayetteville, AR, but considers Fort Walton Beach, Fla., his hometown. Covey was selected as an astronaut in January 1978.

He served as pilot on Shuttle mission 51-I aboard Discovery in August/September 1985. During that mission, the crew deployed three satellites and retrieved, repaired and re-deployed the ailing Leasat/Syncom IV-F3 satellite that failed to activate following deployment on STS 51-D earlier that year. Covey has
logged more than 170 hours in space.

Covey received a B.S. degree in engineering sciences from the U.S. Air Force Academy in 1968 and an M.S. degree in aeronautics and astronautics from Purdue University in 1969.

A fighter pilot from 1970 to 1974, Covey flew 339 combat missions during two tours in Southeast Asia, was director and pilot for electronic warfare testing of the F-15 Eagle, and has flown more than 4,000 hours in more than 25 types of aircraft.

JOHN M. (MIKE) LOUNGE, 38, is mission specialist 1 (MS-1) on STS-26. Born in Denver, Colo., he considers Burlington, CO, his hometown. Lounge was selected as an astronaut in 1980.

He was a mission specialist on Shuttle Discovery's last flight, STS 51-I, in August/September 1985. During this mission, Lounge's duties included deployment of the Australian AUSSAT communications satellite and operation of the remote manipulator system (RMS) arm. He has logged more than 170 hours in space.

Lounge received a B.S. degree in physics and mathematics from the U.S. Naval Academy in 1969 and an M.S. degree in astrogeophysics from the University of Colorado in 1970.

Following graduation from the Naval Academy, Lounge completed naval flight officer training at Pensacola, Fla., and took advanced training as radar intercept officer in the F-4J Phantom; completed a 9-month Southeast Asia cruise aboard the USS Enterprise, participating in 99 combat missions; then transferred to the Navy Space Project Office in Washington, D.C., for a 2-year tour as staff project officer.

BIOGRAPHICAL DATA

DAVID C. HILMERS, 38, Lt. Colonel, USMC, is mission specialist 2 (MS-2) on STS-26. He was born in Clinton, Iowa, but considers DeWitt, Iowa, as his hometown. Hilmers was selected as an astronaut in July 1980.

He served as a mission specialist on orbiter Atlantis' first flight, STS 51-J, a dedicated Department of Defense mission, in October 1985. Hilmers has logged more than 98 hours in space.

Hilmers received a B.S. degree in mathematics from Cornell College in 1972, an M.S. degree in electrical engineering (with distinction) in 1977, and the degree of electrical engineer from the Naval Postgraduate School in 1978.

Following basic training and flight school, he was assigned to Marine Corps Air Station, Cherry Point, N.C., flying the A-6 Intruder. Hilmers then served as an air liaison officer with the 1st Battalion, 2nd Marines, 6th Fleet in the Mediterranean. He was stationed with the 3rd Marine Aircraft Wing in El Toro, CA, at the time of his selection by NASA. Hilmers has logged more than 1,500 hours flying time in 16 different types of aircraft.

GEORGE D. (PINKY) NELSON, 38, is mission specialist 3 (MS-3) on STS-26. Born in Charles City, Iowa, he considers Willmar, MN, his hometown. He was selected as an astronaut in January 1978.

Nelson was a mission specialist on STS 41-C in April 1984, the fourth flight of orbiter Challenger. During that flight, the crew deployed the Long Duration Exposure Facility (LDEF) and retrieved, repaired and re-deployed the Solar Maximum Mission (SMM) satellite. Nelson logged 9 hours of extravehicular activity (EVA) during the SMM repair.

He also flew as a mission specialist on Columbia's seventh flight, STS 61-C in January 1986. During that mission, the crew deployed the Satcom KU satellite and conducted experiments in astrophysics and materials processing. With the completion of that flight, Nelson has logged more than 314 hours in space.

Nelson received a B.S. degree in physics from Harvey Mudd College in 1972 and M.S. and Ph.D. degrees in astronomy from the University of Washington in 1974 and 1978, respectively.

He was involved in astronomical research projects at the Sacramento Peak Solar Observatory, Sunspot, NM; the Astronomical Institute at Utrecht, The Netherlands; the University of Gottingen Observatory, West Germany; and at the Joint Institute for Laboratory Astrophysics in Boulder, CO.

SPACE SHUTTLE PROGRAM MANAGEMENT

NASA Headquarters, Washington, DC

Dr. James C. Fletcher	Administrator
Dale D. Myers	Deputy Administrator
RADM Richard H. Truly	Associate Administrator for Space Flight
George A.S. Abbey	Deputy Associate Administrator for Space Flight
Arnold D. Aldrich	Director, National Space Transportation System
Richard H. Kohrs	Deputy Director, NSTS Program (located at Johnson Space Center)
Robert L. Crippen	Deputy Director, NSTS Operations (located at Kennedy Space Center)
David L. Winterhalter	Director, Systems Engineering and Analysis
Gary E. Krier Acting	Director, Operations Utilization
Joseph B. Mahon	Deputy Associate Administrator for Space Flight (Flight Systems)
Charles R. Gunn	Director, Unmanned Launch Vehicles and Upper Stages
George A. Rodney	Associate Administrator for Safety, Reliability, Maintainability and Quality Assurance
Robert O. Aller	Associate Administrator for Operations
Eugene Ferrick	Director, Tracking and Data Relay Satellite System
Robert M. Hornstein	Acting Director, Ground Networks Division

Johnson Space Center, Houston, TX

Aaron Cohen	Director
Paul J. Weitz	Deputy Director
Richard A. Colonna	Manager, Orbiter and GFE Projects
Donald R. Puddy	Director, Flight Crew Operations
Eugene F. Kranz	Director, Mission Operations
Henry O. Pohl	Director, Engineering
Charles S. Harlan	Director, Safety, Reliability and Quality Assurance

Kennedy Space Center, FL

Forrest McCartney	Director
Thomas E. Utsman	Deputy Director; Director, Shuttle Management and Operations
Robert B. Sieck	Launch Director
George T. Sasseen	Shuttle Engineering Director
John J. Talone	STS-26 Flow Director
James A. Thomas	Director, Safety, Reliability and Quality Assurance
John T. Conway	Director, Payload Management and Operations

Marshall Space Flight Center, Huntsville, AL

James R. Thompson Jr.	Director
Thomas J. Lee	Deputy Director
William R. Marshall	Manager, Shuttle Projects Office
Dr. J. Wayne Littles	Director, Science and Engineering
Gerald W. Smith	Manager, Solid Rocket Booster Project
Joseph A. Lombardo	Manager, Space Shuttle Main Engine Project
G.P. Bridwell	Manager, External Tank Project

Stennis Space Center, Bay St. Louis, MS

I. Jerry Hlass	Director
Roy Estess	Deputy Director
A.J. Rogers Jr.	Manager, Engineering & Propulsion Test Support
John L. Glasery Jr.	Manager, Safety/Quality & Health

Ames Research Center, Mountain View, CA

Dr. Dale L. Compton	Acting Director
Victor L Peterson Acting	Deputy Director

Ames-Dryden Flight Research Facility, Edwards, CA

Martin A. Knutson Site	Manager
Theodore G. Ayers	Deputy Site Manager
Thomas C. McMurtry	Chief, Research Aircraft Operations Division
Larry C. Barnett	Chief, Shuttle Support Office

Goddard Space Flight Center, Greenbelt, MD

Dr. John W. Townsend Jr.	Director
Gerald W. Longanecker	Director, Flight Projects
Robert E. Spearing	Director, Operations and Data Systems
Daniel A. Spintman	Chief, Networks Division
Paul E. Brumberg	Chief, Communications Division
Dr. Dale W. Harris	TDRS Project Manager
Charles M. Hunter	TDRS Deputy Project Manager
Gary A. Morse	Network Director

GLOSSARY OF ACRONYMS AND ABBREVIATIONS

ADSF Automated Directional Solidification Furnace
AFSCN Air Force Satellite Control Network
A/L Approach and Landing
ALT Approach and Landing Test (Program)
AMU Astronaut Maneuvering Unit
AOA Abort Once Around
APS Alternate Payload Specialist
APU Auxiliary Power Unit
ARC Aggregation of Red Blood Cells
ASE Airborne Support Equipment
ATE Automatic Test Equipment
ATO Abort to Orbit

BFC Backup Flight Control (System)
BOC Base Operations Contract

CAPCOM Capsule Communicator
CCAFS Cape Canaveral Air Force Station
CCMS Checkout, Control and Monitor Subsystem
CCTV Closed Circuit Television
CDR Commander
CDMS Command & Data Management Systems Officer
CDS Central Data System
CFES Continuous Flow Electrophoresis System
CIC Crew Interface Coordinator
CIE Communications Interface Equipment
CITE Cargo Integration Test Equipment
CTS Call to Stations

DCC Data Computation Complex
DCR Design Certification Review
DCS Display Control System
DIG Digital Image Generation
DFI Development Flight Instrumentation
DFRF Hugh L. Dryden Flight Research Facility
DMC Data Management Coordinator
DMOS Diffusive Mixing of Organic Solutions
DOD Department of Defense
DOP Diver Operated Plug
DPS Data Processing System

EAFB Edwards Air Force Base
ECLSS Environmental Control & Life Support System
EECOMP Electrical, Environmental & Consumables Systems Engineer
EI Entry Interface
ELRAD Earth Limb Radiance
EMU Extravehicular Mobility Unit
ESA European Space Agency
ESMC Eastern Space and Missile Center
ET External Tank
EVA Extravehicular Activity
FAO Flight Activities Officer
FAWG Flight Assignment Working Group
FBSC Fixed Base Crew Stations

F/C Flight Controller
FCT Flight Crew Trainer
FCTS Flight Crew Trainer Simulator
FD Flight Director
FDF Flight Data File
FDO Flight Dynamics Officer
FOD Flight Operations Directorate
FOE Flight Operations Engineer
FOPG Flight Operations Planning Group
FOSO Flight Operations Scheduling Officer
FR Firing Room
FRC Flight Control Room
FRCS Forward Reaction Control System
FRF Flight Readiness Firing
FRR Flight Readiness Review
FSE Flight Simulation Engineer
FSS Fixed Service Structure

GAS Getaway Special
GC Ground Control
GDO Guidance Officer
GLS Ground Launch Sequencer
GN Ground Network
GNC Guidance, Navigation & Control Systems Engineer
GPC General Purpose Computer
GSE Ground Support Equipment
GSFC Goddard Space Flight Center

HAC Heading Alignment Circle
HB High Bay
HMF Hypergolic Maintenance Facility
HPPF Horizontal Payloads Processing Facility
HUS Hypergolic Umbilical System

IECM Induced Environment Contamination Monitor
IEF Isoelectric Focusing Experiment
IG Inertial Guidance
ILS Instrument Landing System
IMF In Flight Maintenance
IMU Inertial Measurement Unit
INCO Instrumentation & Communications Officer
IRCFE Infrared Communications Flight Experiment
IRIG Interrange Instrumentation Group
ISP Integrated Support Plan
IUS Inertial Upper Stage
IVA Intravehicular Activity

JPL Jet Propulsion Laboratory
JSC Lyndon B. Johnson Space Center

KSC John F. Kennedy Space Center
LC Launch Complex
LCC Launch Control Center
LCS Launch Control System
LDEF Long Duration Exposure Facility
LETF Launch Equipment Test Facility

LOX Liquid Oxygen
LPS Launch Processing System
LSA Launch Services Agreement
LWG Logistics Working Group

MBCS Motion Base Crew Station
MCC Mission Control Center
MD Mission Director
MDD Mate/Demate Device
ME Main Engine
MECO Main Engine Cutoff
MET Mission Elapsed Time
MLE Mesoscale Lightning Experiment
MLP Mobile Launch Platform
MLR Monodisperse Latex Reactor
MLS Microwave Landing System
MMACS Maintenance, Mechanical Arm & Crew Systems Engineer
MMPSE Multiuse Mission Payload Support Equipment
MMSE Multiuse Mission Support Equipment
MMU Manned Maneuvering Unit
MOD Mission Operations Directorate
MOP Mission Operations Plan
MPGHM Mobile Payload Ground Handling Mechanism
MPPSE Multipurpose Payload Support Equipment
MPS Main Propulsion System
MS Mission Specialist
MSBLS Microwave Scanning Beam Landing System
MSCI Mission Scientist
MSFC George C. Marshall Space Flight Center
MSS Mobile Service Structure
MST Mobile Service Tower
MUM Mass Memory Unit Manager

NASCOM NASA Communications Network
NBT Neutral Buoyancy Facility
NIP Network Interface Processor
NOCC Network Operations Control Center
NSRS NASA Safety Reporting System
NSTL National Space Technology Laboratories
NSTS National Space Transportation System

OAA Orbiter Access Arm
OC Operations Coordinator
O&C Operations and Checkout (Building)
OAST Office of Aeronautics & Space Technology
OFI Operational Flight Instrumentation
OFT Orbiter Flight Test
OMBUU Orbiter Midbody Umbilical Unit
OMRF Orbiter Maintenance & Refurbishment Facility
OMS Orbital Maneuvering System
OPF Orbiter Processing Facility
OSF Office of Space Flight
OSS Office of Space Science
OSSA Office of Space Science and Applications
OSTA Office of Space and Terrestrial Applications
OV Orbiter Vehicle

PACE Prelaunch Automatic Checkout Equipment
PAM Payload Assist Module
PAYCOM Payload Command Coordinator
PCG Protein Crystal Growth Experiment
PCR Payload Changeout Room
PDRS Payload Deployment & Retrieval System
PGHM Payload Ground Handling Mechanism
PHF Payload Handling Fixture
PIP Payload Integration Plan
PLSS Portable Life-Support Subsystem
PLT Pilot
POCC Payload Operations Control Center
POD Payload Operations Director
PPE Phase Partitioning Experiment
PRC Payload Changeout Room
PRF Parachute Refurbishment Facility
PRSD Power Reactant Storage & Distribution
PS Payload Specialist
PVTOS Physical Vapor Transport of Organic Solids

R&D Research Development
RCS Reaction Control System
RMS Remote Manipulator System
RPS Record Playback Subsystem
RSS Rotating Service Structure
RTLS Return to Launch Site

SAEF Spacecraft Assembly & Encapsulation Facility
SAIL Shuttle Avionics Integration Laboratory
SCA Shuttle Carrier Aircraft
SCAMMA Station Conferencing & Monitoring Arrangement
SCAPE Self-Contained Atmospheric Protection Ensemble
SID Simulation Interface Device
SIP Standard Interface Panel
SIT Shuttle Interface Test
SL Spacelab
SLF Shuttle Landing Facility
SMAB Solid Motor Assembly Building
SMCH Standard Mixed Cargo Harness
SMS Shuttle Mission Simulator
SN Space Network
SPIF Shuttle Payload Integration Facility
SPOC Shuttle Portable On-Board Computer
SRB Solid Rocket Booster
SRBDF Solid Rocket Booster Disassembly Facility
SRM Solid Rocket Motor
SRM&QA Safety, Reliability, Maintainability & Quality Assurance
SSC John C. Stennis Space Center
SSCP Small Self-Contained Payload
SSIP Shuttle Student Involvement Program
SSP Standard Switch Panel
SSME Space Shuttle Main Engines
SST Single System Trainer
STA Shuttle Training Aircraft
STS Space Transportation System

T Time
TACAN Tactical Air Navigation
TAEM Terminal Area Energy Management
TAL Trans-Atlantic Abort Landing
TDRS Tracking and Data Relay Satellite
TPAD Trunnion Pin Acquisition Device
TPS Thermal Protection System
TSM Tail Service Mast

UHF Ultra-high Frequency
UV Ultra-violet

VAB Vehicle Assembly Building
VLF Very Low Frequency
VPF Vertical Processing Facility

WCS Waste Collection System
WSMC Western Space & Missile Center
WSMR White Sands Missile Range
WSSH White Sands Space Harbor

SHUTTLE FLIGHTS AS OF SEPTEMBER 1988

25 TOTAL FLIGHTS OF THE SHUTTLE

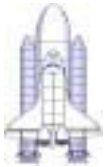

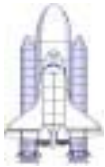

OV-102 Columbia (7 flights)	OV-099 Challenger (10 flights)	OV-103 Discovery (6 flights)	OV-104 Atlantis (2 flights)
	STS-51L 01/28/86		
	STS-61A 10/30/85 - 11/06/85		
	STS-51F 07/29/85 - 08/06/85		
STS-61C 01/12/86 - 01/18/86	STS-51B 04/29/85 - 05/06/85		
STS-9 11/28/83 - 12/08/83	STS-41G 10/05/84 - 10/13/84	STS-51-I 08/27/85 - 09/03/85	
STS-5 11/11/82 - 11/16/82	STS-41C 04/06/84 - 04/13/84	STS-51G 06/17/85 - 06/24/85	
STS-4 06/27/82 - 07/04/82	STS-41B 02/03/84 - 02/11/84	STS-51D 04/12/85 - 04/19/85	
STS-3 03/22/82 - 03/30/82	STS-8 08/30/83 - 09/05/83	STS-51C 01/24/85 - 01/27/85	
STS-2 11/12/81 - 11/14/81	STS-7 06/18/83 - 06/24/83	STS-51A 11/08/84 - 11/16/84	STS-61B 11/26/85 - 12/03/85
STS-1 04/12/81 - 04/14/81	STS-6 04/04/83 - 04/09/83	STS-41D 08/30/84 - 09/05/84	STS-51J 10/03/85 - 10/07/85